NYSDEC Demolition Plan
for the
Tappan Zee Hudson River Crossing

Rev 9
January 23, 2019

Prepared by
Tappan Zee Constructors, LLC
555 White Plains Road, Suite 400
Tarrytown, NY 10591

Document History			
Issue Date	**Description**	**By**	**Revision**
6/30/2016	DEC Demolition Plan for Agency Permit Review/Approval	BP	0
10/20/2016	DEC Demolition Plan for Agency Permit Review/Approval	EB	1
1/12/2017	DEC Demolition Plan for Agency Permit Review/Approval	EB	2
6/15/2017	Revised per DEC comments	EB	3
2/12/2018	Revised per DEC comments	EB	4
4/4/2018	Revised for Area 2 Demolition Methods & DEC Comments	EB	5
5/16/2018	Revised per DEC comments	JC	6
11/5/2018	East Anchor Span Salvage Operation	ERB	7
12/21/2018	East Anchor Span Blasting	ERB	8
1/23/2019	Area 1B Means and Methods & East Anchor Span Sediment Displacement	ERB	9

Table of Contents

Tables

Attachments

1.0 INTRODUCTION

Tappan Zee Constructions, LLC (TZC) has prepared this Demolition Plan (Plan) Rev 9 to provide the general approach and means and methods that will be utilized to demolish the existing Tappan Zee Bridge. This Plan has been prepared specifically to meet the Tappan Zee Hudson River Crossing Project (Project) demolition requirements and environmental performance commitments (EPCs) provided in the Project DB Contract Documents (Contract No. D214134) Part 3 Project Requirements, Section 3 Environmental Compliance and Section 25 Demolition as Conformed November 2012.

1.1 Limits of Demolition

Demolition requirements are included in the Project's Final Environmental Impact Statement (FEIS), July 2012 and Record of Decision (ROD), September 2012 and Project permits, including:

- NYSDEC Permit ID 3-9903-00043/00012-14 modified July 2014;
- NFMS Endangered Species Act Section 7 Consultation Biological Opinion (BO) NER-2017-14375 dated November 1, 2017;
- United States Coast Guard (USCG) Permit dated April 2013;
- United States Army Corps of Engineers (USACE) Permit Number NAN-2012-00090-M10; and
- NMFS Essential Fish Habitat (EFH) Assessment Conservation Recommendations (CR) dated June 2012, Appendix F of the FEIS.

As required by the FEIS and Project permits, all parts of the existing Tappan Zee Bridge across the Hudson River not utilized in the new bridge shall be removed to a minimum of two feet (2') below the river bottom, including:

- Removal of timber piles 2' below river bottom;
- Removal of caisson-supported piers 2' below river bottom; and
- Removal of fenders 2' below river bottom.

1.2 Limit of Demolition for Bents 190 and 191

Bents 190 and 191 of the existing Bridge were constructed to the immediate west and east of the Metro North Railroad (MNR) Right of Way (ROW), respectively. These bents are in close proximity to the MNR track foundations and nearby slopes. Removal of the structures to 2' below the river bottom may result in destabilization of the tracks or slopes in the ROW.

TZC is proposing to keep the existing Tappan Zee Bridge Bents 191 and 190 to remain at or above grade and top of caisson, respectively. Please see Attachment A for drawings of the proposed removal and remaining elevations of these existing bridge bents. As described below, allowing these bridge structures to remain will reduce in-water and landward excavation and demolition activities adjacent to the MNR commuter railroad, thereby reducing potential impacts to railroad operations and near-shore areas without adversely impacting other resources.

1.2.1 Existing Pier Locations and Conditions

Existing Bent 191 is located immediately east of the MNR ROW in Westchester County. This landside bent consists of two (one north and one south) concrete spread footings founded on rock approximately 15-30 feet below existing grade. Each footing is approximately 36 x 36 x 15 feet (L x W x H) and each supports a single 11 x 28 foot concrete pier column (one north and one south). The southernmost corner of the south footing is approximately 23 feet east of the MNR Track 3 and is visible above the existing grade (Attachment B: Figures #1 and #2). The northernmost corner of the south footing is not visible and is approximately 10 feet below the existing steeply sloping grade. Removing the concrete columns and footings of existing bridge Bent 191 below the existing ground line would require excavation and demolition, most likely via hydraulic hammer (e.g., hoe ram) or similar impact equipment, below grade and within very close proximity to the MNR tracks.

Existing Bent 190 is located immediately west of the MNR ROW in Westchester County. This waterside bent consists of two (one north and one south) circular, steel sheet pile encased concrete caissons founded on rock approximately 25-40 feet below the riverbed. Each caisson is approximately 35 feet in diameter and each supports a single concrete pier column (one north and one south). The north caisson is surrounded by a square-shaped sheet pile cofferdam. The top of the sheet pile is just visible above the existing shoreline (Attachment B: Figures 2, 3, and 4). The eastern edge of the circular caisson and sheet pile cofferdam is approximately 20 feet from MNR Track 4. The circular caisson is not visible and is buried approximately 1-8 feet below the existing sloping shoreline. Demolition and removal of the north pier caisson would require excavation of the existing shoreline to within approximately 5 feet of MNR Track 4 or require significant support of excavation (e.g., temporary sheeting) be installed between the MNR tracks and the existing caisson.

The south caisson is located approximately 18 feet from the existing shoreline and 9 feet from Pier 42 Eastbound in water depths of 2-4 feet below mean low water (MLW). The top of the south caisson is approximately 1-foot below mean high water (MHW) and remains partially submerged at MHW (Attachment B: Figures 5 and 6). Removing the caisson two feet below the bottom of the existing waterway would require demolition of the concrete caisson, most likely via hydraulic hammer (e.g., hoe ram) or similar impact equipment, and temporary disturbance of the river bottom immediately surrounding the caisson to remove the outer steel sheet pile via cutting or hydraulic shears. The Project FEIS determined sediments within the vicinity of Bent 190 demonstrated elevated levels of metals. The proposed limits of demolition for Bent 190 would minimize disturbance of these sediments within the Hudson River.

1.2.2 Proposed Pier Demolition

<u>Bent 191</u> – TZC proposes to remove the existing north and south bent columns to grade via concrete wire saw, hammer or shears and leave the footings in place, thereby avoiding additional excavation and demolition below grade and in close proximity to the MNR tracks. See Attachment A for proposed conditions following pier column demolition.

<u>Bent 190</u> – TZC proposes to remove the existing north bent column to approximately elevation 4.00 to allow for signage and marking for navigation, thereby avoiding additional excavation and demolition below grade and in close proximity to the MNR tracks. See Attachment A for proposed conditions following

column removal. Concrete wire saw or shears would be used to remove the concrete column. Similarly, TZC proposes to remove the south bent column to elevation 4.00. The existing caisson and footing would remain in place, thereby avoiding in-water demolition in this near-shore area. Concrete wire saw or shears would be used to remove the concrete column.

As described above, Bent 190 is in close proximity to the MNR track structure and nearby slopes. Given the proximity of the north caisson of Bent 190 from the edge of Track 4 of MNR, removal of the structures to 2' below river bottom will impose an unstable slope (1:1) extended from the limits of removal to the edge of the existing railroad track. According to existing boring logs, the top strata consist of very soft organic material with identified weight of rod properties. This material carries minimal to no shear strength and the required excavation can cause major disturbance in the natural state of the existing slope.

1.2.3 Assessment of Benefits and Potential Adverse Effects

Existing Bents 191 and 190 are located within NYSTA property and lands underwater, and their respective footings are located under the new bridge structure, near new bridge Piers 42 and 43. Due to their nature (i.e., existing footings mostly buried below existing grades), location and access restrictions, transportation and ecological resources were evaluated to identify the benefits and potential adverse effects of the proposed modification.

Transportation resources near Bents 191 and 190 are the Hudson River and MNR. MNR passes immediately adjacent to both bents, within the existing MNR ROW. Bent 191 is located landward and outside of the MNR ROW; therefore, leaving the pier footings in place at this location would have no effect on future navigation of the Hudson River or MNR operations. Similarly, Bent 190 is located outside of the MNR ROW; therefore, leaving the pier footing in place at this location would have no effect on MNR operations.

The north and south foundation at Bent 190 is located along the existing Hudson River shoreline well outside of the navigation channel or waterway used for navigation. The south caisson footing is located approximately 18 feet from the existing shoreline in shallow water that is well outside of the navigation channel and is not used for navigation purposes. TZC proposes to clearly mark the remaining footing using signage or similar to minimize any hazard to navigation. Given the close proximity of the existing foundations to the new bridge pier foundations, navigation through the area would be subject to security and other restrictions; therefore leaving the Bent 190 foundation in place would not adversely impact navigation or transportation resources of the Hudson River.

There are no ecological resources identified near existing Bent 191, which is located immediately east of the MNR in a maintained and unvegetated ROW. Ecological resources near Bent 190 are the aquatic resources, including threatened and endangered species, and habitat of the Hudson River. Near Bent 190 the aquatic habitat is predominately intertidal and subtidal habitats of varying depths, ranging from shallow intertidal shorelines to shallow subtidal shoals. The benthic habitat is unvegetated consisting of coarse sandy to fine silty sediments.

NMFS identified this region of the Hudson as EFH for 16 federally managed species; and identified two federally endangered fish species that occur in this region of the Hudson River, the shortnose sturgeon (*Acipenser brevirostrum*) and the Atlantic sturgeon (*Acipenser oxyrinchus*). NMFS identified several EFH

Conservation Recommendations to avoid, minimize and mitigate for Project impacts pursuant to Section 305(b)(4)(A) of the Magnuson-Stevens Fishery Conservation and Management Act (MSA), and provided several Conservation Recommendations pursuant to Section 7(a)(1) of the Endangered Species Act (ESA), as well as reasonable and prudent measures (RPMs) to minimize and monitor impacts of incidental take of listed shortnose and Atlantic sturgeon.

Prior environmental assessments, including the FEIS and ROD, recognized the benefit of removing the existing waterside bridge piers to offset the footprint of the new bridge pier foundations. At existing Bent 190, the south bent foundation occupies approximately 960 square feet of open water benthic habitat; the north bent foundation and rectangular cofferdam occupies approximately 1,200 square feet of intertidal and open water benthic habitat. The total in-water footprint of the new bridge is approximately 4.7 acres (NYSTA December 17, 2012 Supplement to the March 26, 2012 Joint Permit Application), well below the alternative replacement bridge footprints assessed in the FEIS and ROD (6.5 and 8 acres for the Long Span and Short Span Options, respectively), resulting in a net gain of open water benthic habitat of 2.4 acres following demolition of the existing bridge. Leaving the Bent 190 foundations in place would diminish this net gain by less than 2% while decreasing the disturbance of impacted sediments in the area.

Given the relatively small size of the Bent 190 foundation footprint as compared to the available soft-sediment benthic habitat in the Tappan Zee region (RMs 24-33), leaving the foundations in place would result in an extremely small loss of soft-bottom benthic or foraging habitat for sturgeon. Sturgeon are only likely to be present in the shallow waters along the shoreline if suitable forage is present. Therefore effects to sturgeon are likely to be limited, insignificant and discountable.

FEIS EPCs, NMFS conservation recommendations, and environmental permits, including the NYSDEC Permit 3-9903-0043 and USACE Permit NAN-2012-00090, recognized the benefit of minimizing the disturbance of bottom sediment to minimize potential impacts to aquatic resources. Leaving the Bent 190 column foundations in place would avoid disturbing the Hudson River bottom in the near shoreline intertidal and subtidal habitat.

2.0 EXISTING STRUCTURE

2.1 Area Map General

Beginning in Rockland and working east, the existing structure has been divided into six (6) distinct Demolition Areas (see Attachment C) based on structure type, location and interaction with the completion of the permanent structure. Areas 1 and 6 are unique due to the coordination necessary to complete the new structure and because they each have a land and marine portion. The Demolition Areas are as follows:

- Area 1 A/B: Rockland Tie-in
- Area 2: Rockland Approach
- Area 3: Rockland Truss
- Area 4: Main Span

- Area 5: Westchester Truss
- Area 6 A/B: Westchester Tie-in

Attachment D provides bridge structure definitions for each of the Demolition Areas.

2.2 Area 1: Rockland Tie-in

The Rockland Tie-in Area is comprised of the on land existing structure terminating at the Rockland Abutment. This is designated at Area 1A, and includes Span 1 over River Road. The marine portion, Area 1B, transitions at Bent 3 and continues thru Pier 30. It shares a partial footprint with the permanent approach spans (Unit 1EB and 2EB). Furthermore, this section of existing structure is bordered to the north by the new bridge and shallow water to the south.

2.3 Area 2: Rockland Approach

The Rockland Approach (Piers 31 through 165) consists of the long causeway between the Rockland Tie-in and Rockland Truss sections. This is the largest section by linear footage, and consists of existing structure similar to that described in Area 1. Areas 1 and 2 have been divided due to the construction coordination necessary to perform permanent new bridge work in Area 1. Due to this delineation, work in Area 2 can commence at the beginning of the demolition work window. Area 2 is confined to the north by the new structure with decreasing access from Bents 50 to 30.

2.4 Area 3: Rockland Truss

Working east from Rockland County, the first underdeck spans begin in the Rockland Truss section. Transitioning from the 50-foot causeway spans, Area 3 begins at Bent 166 and ends at Bent 172. The spans in this section are typical at 250 feet and consist of a steel truss supporting the precast concrete panel road surface. The concrete substructure found in Area 3 can also be considered typical at each bent. An upper, solid concrete strut connecting two (2) hollow concrete columns can be found at each location. The top elevation of each bent will vary slightly, and will contribute to the total volume of column concrete. Both circular and rectangular caissons are found in this area.

2.5 Area 4: Main Span

The Main Span (Piers 173, 175, 176, and 178) is a unique structure over the navigable channel. This area is dominated by the steel superstructure cantilever through truss, which is divided into Anchor, Cantilever and Suspended spans. The superstructure supports the precast concrete panel wearing surface, which is a similar design found in Areas 1 – 3. The substructure in this section is unique to this area. Each bent in this area is steel lattice members making up the columns and top strut. The top elevation of each bent varies slightly, and the structure can be considered symmetrical about the centerline of span. The foundations in Area 4 are similar to the rectangular caissons found in Area 3. Specifically, the foundations at Bents 175 and 176 are significantly larger than the anchor bents.

2.6 Area 5: East Deck Truss

Area 5 (Piers 179 through 184) shares many structural details with Area 3. Both sections consist of steel underdeck trusses, supported on concrete struts and columns. Similarly, the bents in the Area consist of circular caissons. Due to the horizontal curve of this Area, the span lengths vary. This determines the specific length of the underdeck section. The Exodermic Deck specifics in this Area are similar to those found in Area 6, and substantially different to the deck details in Areas 1 – 4.

2.7 Area 6: Westchester Tie-in

Area 6 (Piers 185 through 191) represents the tie-in portion to the Westchester Landing. Similar to Area 1, this section is both divided into water (6A) and land portions (6B), as well as coordinated with the final work (Unit 9EB) of the permanent new bridge. Area 6A is structurally identical to Area 5, sharing features for deck, superstructure truss, concrete substructure and foundations.

3.0 SCHEDULE AND SEQUENCING OF WORK

3.1 Sequence General and Milestones

Provided in Attachment E is an overview of the major work areas and anticipated schedule for demolition activities. The schedule information provided is based upon the most up to date Project schedule. Demolition operations began in August 2017. Deck removal operations in Areas 2, 4, and 6 began in October 2017 after all traffic was shifted to the new structure. As each section is completed, the associated substructure work will commence. The foundation work will be the last work performed in each Area.

4.0 REGULATORY REQUIREMENTS

As further described below, demolition of the existing bridge will be conducted in accordance with the Project's requirements in the FEIS, ROD and Project permits (Refer to Section 1.1 for a list of applicable permits). Specifically, means and methods proposed demonstrate conformity with the NYSDEC Permit ID 3-9903-00043/00012-14 Conditions 45-51, 54-55, 57, and 59 as further described below.

Condition 46: Bridge demolition must be conducted in a manner that minimizes the resuspension of sediment.

> TZC has planned for demolition to be performed in a manner consistent with the means and methods described in the FEIS. During substructure and superstructure removal, the proposed demolition takes advantage of the large equipment available to TZC, allowing large pieces of the structure to be cut and removed to the extent possible, rather than demolishing the structures in-place. During foundation removal, full depth turbidity curtains will be employed in Areas 1 and 6 to minimize sediment resuspension. In addition, the rectangular caisson removal will start from the inside out, allowing concrete material to stay within to the interior of the structure during the onset of removal. Every effort will be made to ensure that demolition debris is confined to the location of foundation removal during

demolition and removal. Where applicable, side scan sonar will be used to identify all material to be removed from the River during demolition. Once identified, this material will be recovered.

For more information about Best Management Practices (BMPs) to be employed during Mechanical Foundation Demolition, please refer to Attachment J of this plan.

TZC is proposing to blast the East Anchor Span, between Piers 176 and 178, in Area 4. Blasting would occur above the water's surface and would not directly cause any resuspension of sediment; however, an increase in turbidity and suspended sediments would occur when the East Anchor Span falls to the river bottom. These effects would be temporary and localized.

In order to minimize sediment resuspension during the removal of the East Anchor Span, TZC has prepared a salvage operation plan utilizing a system of chains to be placed on the river bottom (refer to Section 6.5.1) to aid in the removal of the span from the river bottom. These chains will allow the anchor span structure to be recovered in a shorter duration and with less bottom disturbance than if the fallen span is disassembled in place on the river bottom.

Each chain assembly will be 360 feet long and 0.9ft ($10^{13/16}$") wide, and including the central 100 foot section of double chain, will occupy 0.01 acres of benthic habitat when resting on the bottom. Due to the shifts of the chain during deployment and recovery, an additional 3 foot wide area will be disturbed along the length of each chain. This would result in 0.30 acres of benthic habitat disturbance. If used, the pulling chain assemblies would result in 0.1 acres of benthic disturbance. The maximum area of disturbance associated with all chain assemblies is approximately 0.4 acres. The substrate in the area of impact is dominated by sandy mud based on sediment data acquired from the New York State GIS Clearing house.

The placement and retrieval of the chains and the East Anchor Span structure will result in surficial disturbance to the soft sediments and will not degrade its future quality as habitat. The surficial disturbances to the soft substrates will quickly recover as a result of natural fluvial processes. During the time the chains are in place on the river bottom a small percentage of the total area of benthic habitat will not be available. The chain systems are laid out on barges and are visually inspected regularly for the presence of invasive species and will continue to be inspected prior to deployment. TZC will conduct water quality monitoring, as required by the NYSDEC approved Water Quality Monitoring Plan.

To aid in the salvage of the East Anchor Span, sediment displacement will be performed at 2 locations, on the north and south side of the truss (refer to Attachment V), to allow for chains to be placed at each location. TZC will use a heavy digging bucket to move material and at no time will the bucket be raised up out of the water or opened into the water column. Approximately 350 cubic yards of material will be displaced. TZC will conduct Water Quality Monitoring, as required by the NYSDEC approved Water Quality Monitoring Plan.

Condition 47: All debris and materials from the demolition of the existing Tappan Zee Bridge must be removed from the bed and banks of the Hudson River.

TZC will perform a pre-demolition bathymetric survey from the Westchester shore to the Rockland shore and between 700 feet north and south of existing bridge centerline to establish pre-demolition baseline conditions. Periodic side scan sonar surveys will be conducted to identify debris that may have entered the River with the potential to affect navigation.

A post-demolition bathymetric survey will be conducted and compared to the pre-demolition bathymetric survey to verify no debris is present. As depicted in Attachment F, a barge mounted excavator or crane with clam bucket attachment, material grapple or bucket will be used to remove the demolition debris. Demolition debris will be bucketed to adjacent debris barges for off-site disposal.

An additional bathymetric survey will be conducted in areas that have received debris recovery after the post-demolition bathymetric survey to verify all debris capable of being identified by the bathymetric survey has been removed from the river bed.

The proposed demolition means and methods have the potential to produce debris from hoe ramming, shearing, wire sawing, drilling, and blasting. Debris size will vary and is described below:

- Hoe ramming operations may generate debris ranging from dust/granular aggregates to pieces equal or larger than the smallest dimension of the structure being demolished. For example, a two foot by two foot column may generate debris two foot in diameter. Solid circular caisson may generate large debris pieces that could be over 6 feet in diameter.

- Shearing operations may generate debris ranging from dust/granular aggregates to pieces equal or less than the smallest dimension of the structure being demolished. For example, a two foot by two foot column may generate debris up two foot in diameter.

- Wire sawing operations will generate fines and may generate spalls around the size of a fist.

- Drilling operations will generate dust/granular aggregates.

- Blasting will result in the felling of the East Anchor Span into the river. Smaller pieces of debris and demolition equipment remaining on the span will also end up in the river during this activity.

Demolition debris and equipment will be removed from the river bottom prior to the completion of demolition activities.

Pier 176 contains equipment previously used during demolition activities. Refer to Attachment M for the location and inventory of the equipment. Due to safety constraints, this equipment cannot be removed or secured prior to blasting. The equipment is expected to fall within a relatively small area. TZC has prepared a Pollution Abatement & Containment Removal Plan (see Attachment N). In addition, a salvage team will collect all equipment, debris and structure from the river, floating or submerged, with cranes and/or divers as required by Condition 47. All recovered equipment will be logged against the existing equipment inventory.

As part of the Pollution Abatement & Containment Removal Plan, TZC's emergency response team has prepared an inventory of necessary material and will be on site on the day of the blast, ready to

deploy following an all clear. TZC will implement the above plan to contain and clean up the releases that may occur when the equipment enters the River.

The following steps will be taken to control and contain the potential releases from the equipment:

- Response team to assess source locations of release(s).
- Response team will deploy and contain the release with absorbent boom.
- Response team will collect and properly dispose of absorbent boom.
- Response team will pursue and collect any floating debris, such as equipment and tools, and place on barges with appropriate containment.
- Response team will remain on site and support salvage team until equipment sources have been recovered or release has arrested.
- Salvage team will collect all equipment, debris and structure from the river, floating or submerged, with cranes and/or divers as required by Condition 47. All recovered equipment will be logged against the existing equipment inventory.
- In addition, a salvage contractor will remove the span from the river bed with a system of specialized barges equipped with large chain jacks. It is estimated that it will take approximately 14 days to hoist the East Anchor Span from the river bottom using the chains. The structure will be lifted from the river bed using multiple [redacted] chain pullers, suspending the bridge section between two deck barges. When engaged by the chain jacking barges, the chains will form a cradle that will be used to hoist the span back to the river surface. Once at the surface, the span will be dismantled and disposed of at an approved off-site location.

Condition 48: Piles, caissons, abutments, fenders and other in-water components of the existing Tappan Zee Bridge must be removed to two feet below the mud line. Silt curtains must be deployed during this operation.

In-water components will be removed to the NYSDEC required demolition limits, provided in Attachment K. Full depth turbidity curtains will be used in Areas 1 and 6 during foundation removal (refer to Attachment G). Turbidity curtains, 5-feet deep and anchored to the river bottom, will be employed in Areas 2, 3, 4, and 5 to contain debris and reduce turbidity.

In order to access the foundations to the NYSDEC required demolition limit, sediment would be displaced around the foundations. The proposed displacement would result in a trench of approximately two-feet deep and three-feet wide surrounding the pier. Sediment would be displaced from the area surrounding the pier to the edge of the disturbed area in a small mound. This sediment is anticipated to cover approximately three-feet of previously uncovered benthic habitat surrounding the pier. The total surface area of the benthic area disturbed and the volume of sediment displaced are summarized in Table 1 for the Demolition Areas.

Table 1 – Surface Area and Volume of Disturbed Sediments

Demolition Area	Surface Area	Volume
	Acre	(CY)
3 – Rockland Truss: Bents 166 – 172	1.2	880
4 – Main Span: Bents 173 – 178	1.0	800
5 – Westchester Truss: Bents 179 – 186	1.0	700
6 – Westchester Tie-in: Bents 187 – 190	0.4	400
Total	**3.6**	**2,780**

Displacement of benthic sediments, as described above, is necessary to achieve removal of the TZB in accordance with the contract and Project permits. The foundation types, including the circular caissons and the floating caissons require external access in order to perform the necessary work. For example, the metal sheet piles wrapping the circular caissons would be cut using a shear or diver which would be accessed from outside of the footprint of the pier. Sediment displacement would allow access to these components of the existing bridge to the NYSDEC required demolition limit with minimal sediment disturbance.

In order to minimize sediment resuspension, an open excavator bucket would be utilized to pull back sediment around the foundations rather than lifting sediment up into the water column. This method could result in isolated resuspension of benthic sediments. Hand jetting may be used to expose steel sheet and pipe pile to facilitate cutting by divers. The hand jetting method will use either pressurized air or water in order to displace the sediment to reach the necessary elevations.

Extensive water quality monitoring during the Project has demonstrated that resuspension of bottom sediments associated with activities such as dredging and pile driving infrequently resulted in exceedances of the Project's NYSDEC Permit conditions. Furthermore, any observed exceedances were also typically temporary in nature.

Benthic habitat could be disturbed by the collapse of the East Anchor Span and the placement and recovery of the chain systems used to salvage it. When the East Anchor Span falls onto the river bed, there will be temporary and localized impacts on the benthic habitat. Benthic organisms would be buried by displaced sediments and might be crushed by the bridge span. This activity would not be likely to significantly impact sturgeon foraging habitat or prey resources because similar benthic habitat and prey taxa are present throughout the Tappan Zee region. Based on the dimensions of the East Anchor Span, approximately 1.8 acres of benthic habitat would be impacted. Additionally, it is estimated that lifting the span out of the river with the chain jacking system would disturb less than 0.4 acres of benthic habitat. A small portion of the footprint of the chains would occur within the same footprint of the East Anchor Span. This disturbance would be insignificant given the soft sediments; any temporary disturbance to the sediment surface from the chains will be smoothed over by natural processes (currents, sediment deposition, etc.). The placing and ultimate retrieval of the chains and East Anchor Span structure will result in surficial disturbance to the soft sediments and will not degrade its future quality as habitat. The surficial disturbances to the soft substrates will quickly recover as a result of natural fluvial processes. During the time that the chains are in place on the river bottom a small

percentage of the total area of benthic habitat will not be available as habitat for benthic organisms or as foraging habitat for benthic-foraging fishes, including shortnose and Atlantic sturgeon. Given that the Hudson River is approximately three miles wide in this area, suitable habitat is available above and below the project site.

Benthic habitat could be disturbed by the proposed means and methods for Area 1B. As demolition has progressed, site constraints in Area 1B have impacted the ability to conduct demolition through Bent 9. Specifically, throughout the tidal cycle there is little or no water between Bents 3 and 9. In addition, there is a buildup of sediment and mud between Bents 3 and 7 which is retained by a sheet pile wall. These site conditions preclude the use of barges for access and the collection of demolition materials. TZC is proposing to modify the means and methods for demolition for Bents 3 through 9 (refer to Attachment U).

In areas with limited depth and access, pile cap sections will be demolished in place from the existing wooden and steel trestles on top of the pile caps. Once foundation removal reaches the point where the trestle must be removed to expose the remaining foundation, it is necessary to install a working platform to provide safe access for demolition equipment and a route for demolition debris to be removed from site.

The working platform will generally be located between the southern half of adjacent pile caps and consist of sections of interconnected large diameter wooden beams (crane mats) set on a base of rubblized concrete produced by the demolition of adjacent pile cap sections. The rubblized concrete will be placed on the river bottom in the area between the unbroken sections of adjacent pile caps. These platform systems allow the demolition equipment to operate without risk of getting stuck in the sediment and provide the necessary vertical relief to remain clear of the water.

Once demolition is complete, the working platforms will be used to haul the rubblized material to shore for placement in trucks or containers. The working platforms will also be removed in their entirety; this includes the removal of the concrete rubble that forms the base as required by Permit Condition 47. Due to the low water conditions, concrete rubble can be readily identified and removed. The removal of demolition debris and the working platforms will start at the eastern end of the work area and incrementally proceed westward to the Rockland shoreline until all materials are removed.

The demolition in Area 1B from Bents 3 through 9 will produce temporary and localized impacts on the benthic habitat. Benthic organisms would be buried by rubble being placed in the river. Approximately 376 CY of rubble will be used to perform this work. This disturbance would be insignificant given the soft sediments; any temporary disturbance to the sediment surface will be smoothed over by natural processes (currents, sediment deposition, etc.). The placement of rubble and use of a working platform will result in surficial disturbance to the soft sediments and will not degrade its future quality as habitat. The surficial disturbances to the soft substrates will quickly recover as a result of natural fluvial processes. During the time that this work will be performed, a small percentage of the total area of benthic habitat will not be available as habitat for benthic organisms or as foraging

habitat for benthic-foraging fishes, including shortnose and Atlantic sturgeon. Given that the Hudson River is approximately three miles wide in this area, suitable habitat is available above and below the project site.

Condition 49: A floating containment booms and/or silt curtains must be deployed around all active substructure demolition areas to control and contain debris and discharges to meet water quality standards.

TZC will utilize means and methods that will minimize the likelihood of debris entering the River. Specifically, TZC intends to remove substructure in large modular components minimizing potential for generation of small pieces of debris at risk of falling into the River. Visual observations of activities will be conducted by a barge-based or vessel-based observer during demolition activities as required per the Water Quality Monitoring Plan. If turbidity is observed that extends beyond the 500-ft mixing zone, corrective actions will be implemented to comply with water quality standards.

Condition 50: A debris containment net must be deployed and maintained at all times during demolition of the bridge deck and superstructure.

TZC will remove the existing Tappan Zee Bridge deck and superstructure in modular components, minimizing risk of debris generation during superstructure removal operations. TZC will utilize access systems during the superstructure removal stage to provide access for workers to separate deck panels, stringer beams and diaphragms from the supporting bridge structure. These access systems serve dual purpose by providing debris containment for anchor bolt, stringer beam and diaphragm separation for deck removal operations. Deck preparation in Areas 2, 3, 5 and 6 will occur while over debris containment. Deck rigging and removal in Areas 2, 3, 5, and 6 may occur without debris containment. Area 4 deck preparation and deck removal will occur over debris containment. These areas are further described below. Containment measures are detailed in Attachment H.

<u>Rockland Causeway (Areas 1 and 2):</u>

Superstructure consists of a composite deck/superstructure element made up of deck panels precast integrally over bridge beams. Panels/beams sit directly on top of the bridge column/caps and will be removed in modular pieces by crane in the following steps:

- Separate panels with top side deck saws. Vacuums will be used to control water generated during the operation.
- Deck Preparation - Drill out lifting holes/attach lifting lugs at corner points of panel. Cut bolt connecting panel to pier cap.
- Rig and lift panel off pier, set onto barge.

<u>Truss Spans (Areas 3, 5, and 6):</u>

Superstructure consists of simple span truss elements with precast deck panels secured on top framing of truss. Deck removal will be similar to the Rockland Causeway described above, removing enough deck to rig and lift the entire truss span (235 feet to 250 feet) in the following steps:

- Separate panels with top side deck saws. Vacuums will be used to control water generated during the operation.
- Deck Preparation - Drill out lifting holes/attach lifting lugs at corner points of panel. Cut bolt connecting panel to truss.
- Rig and lift panel off truss, set onto barge.
- Install lifting lug on truss at four points.
- Rig truss with Barge Mounted Derrick Crane.
- Lift truss off piers, set onto barge.

Main Span (Area 4)

Superstructure consists of a suspended, cantilever and anchor truss elements with precast deck panels secured on floor beam framing of truss. Deck removal will be similar to the Rockland Causeway described above, removing deck prior to truss removal.

- Separate panels with top side deck saws. Vacuums will be used to control water generated during the operation.
- Deck Preparation - Drill out lifting holes/attach lifting lugs at corner points of panel. Cut bolt connecting panel to truss.
- Rig and lift panel off truss, set onto barge.
- Install falsework, access, and strand jacking equipment
- Lower with strand jacks to barges. Truss removal and lowering is not anticipated to produce debris as it is a large modular component. In the event debris were to be produced, the truss sections are lowered onto barges, which would provide debris containment.

Rigging and lifting of deck panels from the above described structures to barges is not anticipated to produce debris. In the event debris is generated during the lifting operation, the method will be reevaluated and updated to address the conditions of the operation.

Condition 51: Blasting for bridge demolition is prohibited.

Following the unexpected events of September 7, 2018, the East Anchor Span, between Bents 176 and 178, unexpectedly shifted. This shift raised immediate concerns about the structural integrity of the span, which in turn raised safety concerns for demolition crews dismantling the bridge, vessels in the navigation channel, and the travelling public on the new Governor Mario M. Cuomo Bridge, constructed less than [redacted] away from the original Tappan Zee Bridge. These concerns stemmed from the potential for the East Anchor Span to fall, which could cause one or more of the following scenarios:

- **Navigation channel blockage**: The East Anchor Span is adjacent to the federal navigation channel. The span is currently stable, but key members are highly stressed and there is currently a risk of collapse. The east half of the channel, has been closed since September 8, 2018.In the event of a collapse, the structure is expected to fall within the established safety zone which could impact the area adjacent to the navigation channel. The navigation channel sees over 15,000 commercial vessels per year.

- **Damage to the new eastbound Governor Mario M. Cuomo Bridge:** The East Anchor Span is [redacted] away from the new eastbound bridge. There is a remote possibility that certain members could strike the pile cap and lower leg of the new eastbound Governor Mario Cuomo Bridge. However, it has been determined that this type of impact would not compromise the structural integrity of the bridge hence vehicular traffic across the span is deemed safe.

Since the East Anchor Span became compromised, ongoing monitoring of the East Anchor Span has continued and concerns remain regarding the stability of the span through this winter. Winter weather conditions such as freezing and thawing, high winds [redacted] rapid fluctuations in temperature, or the combination of these factors could further weaken the span. If a collapse were to occur during the winter, retrieval of the span debris could be delayed, due to river ice and weather conditions that could prevent marine operations. After considering safety and logistics, a controlled blast is proposed for the demolition of the East Anchor Span (see Attachment O for the Preliminary Blast Plan). This involves explosive charges to cut the superstructure and substructure at Bents 176 and 178 (all explosive charges would be above-water) and drop the span into the Hudson River in a controlled manner, then use a chain system, which would be placed in the river prior to blasting, to raise the span from the bottom of the river for dismantling.

Using controlled, explosive charges was considered the best approach because it would entail a predictable, controlled collapse A salvage operation has been developed (see Attachment P for the Salvage Plan) that allows for the span to be removed from the river using a chain system where it would then be dismantled on a barge.

The East Anchor Span is located in Area 4, which is the Main Span which traverses the navigable channel between Bent 173 and Bent 178. The proposed change to the demolition means and methods previously proposed for this structure will only impact removal of the superstructure for the East Anchor Span between Bents 176 and 178. The deck has already been sawcut and removed. The demolition and removal of the pier will proceed as planned. The rectangular caisson foundations will be demolished as described in section 8.4 below. Vessel traffic from barges and tugboats associated with demolition of the East Anchor Span will not change from the methods previously assessed.

Controlled blasting places the anchor span structure in a controlled manner into a portion of the river away from the federal navigation channel. Having the chain jacking system greatly facilitates the recovery and safety compared to an uncontrolled collapse of the structure. Controlled blasting is the safest alternative as it does not require manpower to access the anchor span structure. The blasting charges would be placed [redacted], which can be accessed by adjacent barges or directly from the bridge foundations. Overall, the Controlled Blasting Alternative would provide the best solution

from a safety perspective by avoiding dangerous situations, risks of loss of human lives, impacts to the new bridge operations, and vessels below. Please see Attachment Q for a summary of blast parameters and Attachment R for a summary of the environmental effects associated with the blasting.

Blasting is not being proposed for demolition of any other areas of the existing Tappan Zee Bridge.

Condition 54: Within 60 days of completion of bridge demolition, a hydrographic survey of the river bottom beneath the footprint of the demolished bridge must be submitted to the Department. For comparison purposes a pre-demolition survey must be provided with the post-construction survey.

TZC will conduct a pre- and post-bathymetric survey of the riverbed from Westchester shore to Rockland shore and between 700 feet north and south of the existing bridge centerline within 60 days of completion of Bridge demolition. The bathymetric survey will be conducted on a 10ft grid and referenced to the North American Vertical Datum (NAVD88).

Condition 55: The Permittee must minimize disturbance to Peregrine Falcons during all phases of the bridge replacement project. All activities must maintain the maximum distance from the peregrine falcon nest on the existing bridge as practical. No less than 30 days before starting the Authorize Activity the Permittee must submit a plan for protection of the falcon nest to the department

A Peregrine Falcon Protection Plan has been prepared for the Project which describes demolition activities. TZC will schedule coordination meetings with the NYSDEC two (2) months prior to demolition on the existing Main Span to discuss issues related to the falcon nest. TZC will provide necessary cooperation and access to the NYSDEC to facilitate the evaluation of the peregrine falcons nesting activity during each year of demolition to determine if a pair is active on the territory, are nesting and the success of that nest.

Condition 57: The Permittee must evaluate Peregrine Falcon nesting activity during each year of construction and demolition to determine if a pair is active on the territory, are nesting, and the success of that nest. Any reports of impacts to the nest should be reported to the wildlife manager at the NYSDEC Region 3 Headquarters in New Paltz, NY.

A Peregrine Falcon Protection Plan has been prepared for the Project which describes demolition activities. TZC will provide necessary cooperation and access to the NYSDEC to facilitate the evaluation of the peregrine falcons nesting activity during each year of demolition to determine if a pair is active on the territory, are nesting and the success of that nest. Any reports of impact to the nest will be reported according to the approved Plan.

Condition 59: At least 45 days before starting dredging activities; decanting activities; removal of large debris fields; pile driving in zone C; channel armoring; cofferdam construction; removal of the existing bridge; or any other activity that may cause resuspension of the bottom sediments, Permittee must submit a water quality monitoring plan to the department. If activities occur concurrently in multiple locations, each activity that may cause resuspension of bottom sediments must be monitored separately. The Plan must be in effect at all times during these activities. The above activities may start when the Department has given written approval of the plan.

Water Quality Monitoring Plan (WQMP) Rev10 was submitted to and approved by the NYSDEC in May 2018. Water Quality Monitoring will be conducted during the blast operations, once an All Clear is given. As required, the WQMP will be updated to reflect conditions that may change as demolition progresses.

5.0 REMOVAL OF DECK SUPERSTRUCTURE

5.1 Superstructure Deck General

The existing deck consists of three (3) structural types; Precast, Exodermic and Cast in Place. The Precast deck variety accounts for the majority of the existing span and can be found in Areas 1 – 4. Areas 5 and 6A, to include Span 191, represent the locations of the Exodermic Deck. Finally, the Area 6B Tie-in on land is constructed with a Cast in Place deck system. Each type will be removed similarly, saw cut from the supporting structure and lofted free. The unique details, and necessary steps to free the deck, will be described in this section. As these activities will require the cutting and removal of steel members, adherence to the OSHA Lead Exposure requirements for personnel protection and monitoring, OSHA 1926.62(d)(2)(iv), will be necessary. In addition to the wearing surface itself, this section outlines the necessary components to be removed prior to the deck activities. Contractual requirements for NYSTA Salvageable components will dictate individual bridge components to be removed and stored at NYSTA locations. Once panel sections are free from the structure, they will be landed on trailers or barges for processing.

5.2 Deck Miscellaneous Sections

In addition to the deck itself, there exists miscellaneous items that will be disconnected and removed from the structure. As mentioned above, contractual requirements for NYSTA Salvageable components will dictate individual bridge components to be removed and stored at NYSTA locations. Utilities will be decommissioned prior to the start of all demolition activities. Outside of the bridge demolition footprint the utility source will be de-energized, locked and tagged per approved Project plans. This will allow the safe demolition and removal of all light poles, sign structures, conduit and bridge lighting. Bridge barriers will also be removed at this time. Side and mobile barriers can be removed prior to saw cutting panel joints. Barrier sections will be rigged and disconnected from the concrete deck. These sections will be loaded on trailers and later, transferred to barges.

5.3 Precast Panels

Precast panels are found in Areas 1 – 4. The panels in Areas 1 and 2 are 50-feet in length and 100 kips in weight. Panels in Area 3 are approximately 25-feet in length and 60 kips in weight. The precast panel stringers are connected to the main floor beam truss members, in addition to the panel to panel diaphragm channel connections. At approximately 32-feet, the Area 4 Main Span panels are longer and heavier than the Area 3 panels. These panels average 70 kips and are supported at each end at the floor beam members. The bolted seat connection and the diaphragm connections require under deck access to facilitate full panel removal.

5.3.1 Demo sequence Areas 2 and 3

The typical sequence of work is outlined in the steps below:

1. Working underneath the deck, torch cut the diaphragms connecting the individual panels and the anchor bolts tying the panels to the substructure.
2. Separate the panels along the transverse and parallel joints with concrete deck saws. Open lifting holes with drills.
3. Rig and loft panels onto deck barges for off-site disposal.

5.3.2 Demo Sequence Area 4

The typical sequence of work is outlined in the steps below:

1. Assemble and install underdeck debris and access shielding.
2. Access the precast panels from the underdeck shielding and torch cut diaphragms and anchor bolts from main floor beams.
3. Separate the panels along the transverse and parallel joints with concrete deck saws. Open lifting holes with drills.
4. Rig and loft panels onto deck barges for off-site disposal.

5.4 Exodermic Panels

The Exodermic Deck sections in Areas 5 and 6 have a variable width depending on lane location. Between Bents 178 and 190, the typical Exodermic Deck Panels are 12-feet in length, with main bearing bars running the width (transverse to traffic) and distribution bars fabricated perpendicular. The steel grid is topped (precast) with concrete and paved with a ½ -inch asphalt wearing surface.

5.4.1 Demo Sequence Areas 5 and 6

The typical sequence of work is outlined in the steps below:

1. Saw cut exodermic deck into panels.
2. Install lifting lugs to the panels utilizing drop in anchors.
3. Rig and loft panels onto deck barges for off-site disposal.

6.0 REMOVAL OF STEEL SUPERSTRUCTURE

6.1 Superstructure Steel General

Existing steel superstructure includes the Main Span Truss and the Approach Underdeck Trusses in Areas 3 through 6. The removal of steel structural members will require adherence to the OSHA Lead Exposure requirements for personnel protection and monitoring, OSHA 1926.62(d)(2)(iv). The dismantling will be performed by removing large sections of existing truss, lowering to barges for off-site disposal. This will

be utilized for all twenty (20) underdeck trusses, as well as the two (2) approach and one (1) suspended Main Spans. Only the cantilevered portions of the Main Span will be removed incrementally.

6.2 Underdeck Truss Removal Sequence

The typical sequence of work is outlined in the steps below:

1. Install lifting lugs at lifting points.
2. Position Left Coast Lifter (LCL) at confirmed radius of pick.
3. Lift truss and place on barge for off-site disposal.

6.3 Main Span – Suspended Span Removal Sequence

The typical sequence of work is outlined in the steps below:

1. Modify existing members and install falsework systems and access.
2. Install Strand Jacking system.
3. Close channel for a period estimated at 48 hours to allow lowering of the Suspended span, tie-down (lashing and securing) to the transport barges and towing away from the main channel. This channel closure will be coordinated with the USCG and other Regulatory agencies, as appropriate.
4. Lower span to barge and secure for dismantling and disposal.

6.4 Main Span – Cantilever Span Removal Sequence

The typical sequence of work is outlined in the steps below:

1. Modify existing members, install falsework systems and access, and finally cut and loft members.
2. Prepare rigging locations for each pick. Take the load with the crane prior to performing the final torch cuts.
3. Cut the section free, swing and land the section on the adjacent material barge.
4. Coordinate stages that will impact or alter the navigable channel with the USCG and other Regulatory agencies, as appropriate.

6.5 Main Span – Anchor Spans Removal Sequence

The typical sequence of work is outlined in the steps below:

1. Modify existing members and install falsework systems and access.
2. Install Strand Jacking system.
3. Lower span and secure to barges for dismantling and disposal.

6.5.1 East Anchor Span Blasting

As further described in Condition 51, TZC is proposing to blast the East Anchor Span, following the events of September 7, 2018. The use of explosives, or blasting, would entail removing the bridge span by inducing structural failure at the base of the steel tower legs. Charges would be placed on [redacted] that support the East Anchor Span. The blast charges would sever the steel towers and cause the span to fall into the river. The tower legs can be accessed by adjacent barges or directly from the bridge foundations to place the blasting charges.

To allow for the controlled and directed failure of the structure, the tower legs would be strategically torch cut and weakened prior to the use of cutting explosives. A high capacity pulling system [redacted] would be used to topple the structure in the desired direction at the time of explosive cutting. Prior to blasting, a combination of cables and chains would be used to apply tension to the span and direct the falling span east toward Bent 182 and away from the navigation channel.

The blasting charges would be placed on [redacted] the bridge span and would be detonated [redacted] The use of the delayed blasting caps would mitigate peak overpressure[1] generated by the detonation. The blast sequence will be initiated at one end of the bridge and will progress to the other end. Charge initiation [redacted] will be separated with a minimum delay [redacted]; therefore, the planned maximum of explosives detonating per delay will not exceed [redacted] The charges will be encased in a protective cover consisting of multiple layers of strandboard and corded conveyer belting to prevent fly of debris resulting from the detonation. That at-source blast protection will then be wrapped with 16 oz geotextile fabric to contain fly of at-source protection materials. Refer to Attachment O for additional information and depictions of the proposed blasting. Blasting activities will be performed in strict adherence with all industry standards applying to control of blasting and blast vibrations.

6.5.2 East Anchor Span Salvage Operation

TZC has prepared a Salvage Plan (see Attachment P) to remove the East Anchor Span from the river bottom, dismantle it and prepare for proper disposal.

A system of large chains and two parallel chain pulling barges will be employed to recover the structure from the river bottom. Ten 360 foot lengths of heavy chain will be laid across the river bed beneath the anchor span. The central 100 feet of these chains will consist of a double section of chain that is connected to the exterior lengths by steel plate rigging. These chain systems will be connected to two 300’ x 100’ specialized chain pulling barges located on both sides of and parallel to the span (Refer to Attachment L for detailed depictions). When tensioned these chains will form a sling beneath the structure so it can be lifted off the river bottom when the chain pullers on each barge are engaged.

[1] Overpressure or blast wave is the sudden onset of a pressure wave after an explosion, caused by the energy released in the initial explosion—the bigger the initial explosion, the more damaging the pressure wave. Pressure waves are nearly instantaneous, traveling at the speed of sound (NOAA 2018).

This approach allows the majority of the structure to be promptly recovered in one large piece and will allow for disassembly to occur at the surface. The chains will be preplaced and the ends of the chains will be secured to marker buoys allowing for retrieval from the river bottom and connection to the chain pulling barges.

In addition, TZC is placing pulling chains, in addition to the lifting chains, to support the proposed blasting of the span. The system of pulling chains (two 720 foot length chains) will be used to direct the fall of the structure eastward and away from the navigation channel. These pulling chains assemblies will feed into a chain puller mounted to an anchored barge positioned to the east of the span.

The pulling chains will be removed by crane from the river after demolition of the bridge. The lifting chains will be removed from the river once the span is lifted from the river bottom, which is an estimated 2 weeks after the blasting event. Following retrieval, the chains will be placed on barges and removed from the project site.

7.0 REMOVAL OF SUBSTRUCTURE

7.1 Existing Substructure General

Existing substructure, bridge wide, is defined as a system of concrete columns tied together at the top by a concrete strut(s), also referred to as a pier cap. The Substructure is further defined as the portion of the bridge above the foundations and below the superstructure/deck. Areas 1, 2, 3, 5, and 6 are concrete while Area 4 is steel.

7.2 Areas 1 and 2

The typical sequence of work is outlined in the steps below:

1. Rig concrete struts and columns with crane.
2. Separate reinforced concrete connection by hammering, cutting or shearing.
3. Loft sections and land on debris barges for off-site disposal

7.3 Areas 3, 5, and 6

The typical sequence of work is outlined in the steps below:

1. Rig concrete struts and columns with crane.
2. Separate reinforced concrete connection with wire saw.
3. Loft sections and land on debris barges; downsize for off-site disposal.
4. The bottom 30-feet of the substructure will remain in place and be demolished with the foundation as described below.

7.4 Area 4 Steel Lattice Substructure

The typical sequence of work is outlined in the steps below:

1. Remove Icebreaker/Fender assemblies. Prepare rigging locations for each pick section.
2. Take the load with the crane and torch cut the pier sections.
3. Land the section with the crane on the adjacent material barge for off-site disposal.

8.0 REMOVAL OF BRIDGE FOUNDATION AND PILES

8.1 Foundation General

There are (3) major foundation types on the existing structure.

1. Timber pile supported pile cap foundations are found in Areas 1 and 2.
2. Paired solid concrete circular caissons founded on H Pile are found in Areas 3, 5, and 6, at Bents 166 – 168 and 179 – 190. These foundations are fully or partially enclosed by steel sheet pile.
3. Hollow rectangular caissons are found at in Areas 3, 4, and 5, at Bents 169 – 178. These foundations consist of cellular rooms separated by concrete walls and ceilings. Each of these foundations are founded on either H Pile or H Pile encapsulated inside circular piles.

8.2 Areas 1 and 2 – Timber Pile Caps

The typical sequence of work is as follows in Area 1B:

1. Demolish pile caps in place using hydraulic hammers and shears. Bucket rubblized material from the river bottom and place in adjacent debris barge for transport for off-site disposal.
2. Snap timber piles at the NYSDEC required demolition limit using barge mounted excavators equipped with a bucket and thumb or grapples.

The typical sequence of work is as follows in Area 1B from Bents 3 through 9:

1. Pile cap sections will be demolished in place and timber pile will be removed from the existing wooden and steel trestles on top of the pile caps. Once foundation removal reaches the point where the trestle must be removed to expose the remaining foundation, a working platform will be installed to provide safe access for demolition equipment and a route for demolition debris to be removed from site.

2. The working platform will generally be located between the southern half of adjacent pile caps and consist of sections of interconnected large diameter wooden beams (crane mats) set on a base of rubblized concrete produced by the demolition of adjacent pile cap sections. The rubblized concrete will be placed on the river bottom in the area between the unbroken sections of adjacent pile caps.

3. The working platforms will then be used to haul the rubblized material and timber pile to shore for placement in trucks or containers. The working platforms will be removed in their entirety; including the concrete rubble.

The typical sequence of work is as follows in Area 2:

1. Demolish in place using hydraulic hammers and shears. Bucket rubblized material from the river bottom and place in adjacent debris barge for transport for off-site disposal.
2. Snap timber piles at the NYSDEC required demolition limit using barge mounted excavators equipped with a bucket and thumb or grapples.

8.3 Circular Caissons

The typical sequence of work is as follows:

1. Displace existing material from the river bottom with an excavator or jetting to expose sheet pile at demolition limit.
2. Mark and torch cut sheet pile at demolition limit with divers.
3. Hoe ram the remaining 30-feet of concrete column substructure, if applicable.
4. Hammer and bucket caisson to debris barges for off-site disposal.
5. Sheet pile removal shall occur at any time during this operation.
6. If applicable, cut and remove H pile at the base of caisson.

8.4 Rectangular Caissons

The typical sequence of work is as follows:

1. Install temporary 36-inch spuds as needed around pier perimeter with vibratory pile driver/ extractor. Piles are for mooring/fendering of work barges.
2. To the extent possible start demolition inside of the exterior walls, beginning with the roof of the caisson and continuing to the intermediate floors and interior walls.
3. Advance demolition and removal of the exterior walls.
4. Demolish via hoe ramming, cutting and shearing.
5. Remove debris throughout the operation via bucketing. All debris will be removed to the NYSDEC required demolition limit.

9.0 REMOVAL OF ICEBREAKER AND FENDER

9.1 Timber Pile Clusters – Bents 4 – 165

The typical sequence of events is as follows:

1. Install full depth turbidity curtains prior to work commencing at Bents 4 – 30.
2. Snap timber piles at the NYSDEC required demolition limit with excavators equipped with a bucket and thumb or grapples.
3. Any timbers that break above the required depth below the river bottom may be removed during the demolition of the pile caps.

9.2 Timber/Steel Fender Frame – Bents 169 – 173 and 178

The typical sequence of events is as follows:

1. Rig sections of the timber/steel fender with barge mounted crane or excavator.
2. Displace material to expose pile to the NYSDEC required demolition limit.
3. Cut pile supports to the NYSDEC required demolition limit with divers or excavator mounted shear.
4. Torch cut and loft section to debris barge for off-site disposal.
5. Alternatively to cutting pile, pile may be extracted with a vibratory hammer.

9.3 Triangular Concrete Icebreakers

The typical sequence of events is as follows:

1. Displace existing material from the river bottom with an excavator or jetting to expose sheet pile.
2. Mark and torch cut sheet piles at demolition limits by divers.
3. Hammer and bucket concrete to debris barges for off-site disposal.
4. Sheet pile removal shall occur at any time during this operation.
5. If applicable, cut and remove H pile and or timber pile at the base of ice breaker.

9.4 Main Span Fender

The typical sequence of events is as follows:

1. Wire saw or otherwise cut fender into sections, remaining supported by 48” steel pile.
2. Drill and/or install rigging locations.
3. Rig sections with barge mounted crane.
4. Perform additional wire sawing, if applicable.
5. Separate rigged precast section from 48” pile with wire saw, shear, torch or other cutting method, if applicable.
6. Loft and land section on debris barge for off-disposal.

7. Displace existing material from the river bottom with a bucket or jetting to the NYSDEC required demolition limit
8. Torch cut or shear remaining 48" pile at the NYSDEC required demolition limit and place on debris barge for off-disposal.

10.0 BARGE TRANSFER OF MATERIALS

Materials not reused or recycled will be transported to an appropriate, permitted off-site disposal facility. TZC has awarded the following disposal contracts for the disposal of demolition material:

- **ACK Marine and General Contracting, LLC.**
  - Disposal Location: Port of Coeymans, New York
  - Distance from Tappan Zee Bridge Site: 100 Nautical Miles
  - Demolition Material: Concrete Rubble
  - Estimated Number of Shipments: 160
  - Disposal Shipping Method: Barge
- **CS Construction Logistics, LLC.**
  - Disposal Location: Port of Coeymans, New York
  - Distance from Tappan Zee Bridge Site: 100 Nautical Miles
  - Demolition Material: Timber Pile (Creosote/CCA treated and untreated,)
  - Estimated Number of Shipments: 74
  - Disposal Shipping Method: Barge
- **SIMS Metal Management**
  - Disposal Locations:
    - SIMS Albany, New York
      - Distance from Tappan Zee Bridge Site: 101 Nautical Miles
      - Estimated Number of Shipments: 24
    - SIMS New Jersey
      - Distance from Tappan Zee Bridge Site: 30 Nautical Miles
      - Estimated Number of Shipments: 20
  - Demolition Material: Steel Lattice, Underdeck Truss, Anchor Span Truss, Suspended Span Truss and Cantilever Span
  - Disposal Shipping Method: Barge

- **Weeks Marine Inc.**
  - Disposal Contract Date: October 20, 2017
  - Disposal Locations:
    - Perth Amboy, NJ
      - Distance from Tappan Zee Bridge Site: 44 Nautical Miles
      - Estimated Number of Shipments: 75
      - Demolition Material: Precast Deck Panels, exodermic deck panels, concrete substructure, concrete pile caps and precast concrete fenders
      - Disposal Shipping Method: Barge
      - Processed Concrete will be disposed of as follows:
        - Fire Island Reef
          - Distance from Perth Amboy: 49 Nautical Miles
          - Estimated Number of Shipments: 4
        - Moriches Reef
          - Distance from Perth Amboy:71 Nautical Miles
          - Estimated Number of Shipments: 2
        - Shinnecock Reef
          - Distance from Perth Amboy: 85 Nautical Miles
          - Estimated Number of Shipments: 1
        - Rockaway Reef
          - Distance from Perth Amboy: 20 Nautical Miles
          - Estimated Number of Shipments: 2
        - Hempstead Reef
          - Distance from Perth Amboy: 34 Nautical Miles
          - Estimated Number of Shipments: 5
    - Port of Coeymans, NY
      - Distance from Tappan Zee Bridge Site: 100 Nautical Miles
      - Estimated Number of Shipments: 15
      - Demolition Material: substructure and substructure caps
      - Disposal Shipping Method: Barge
    - Jersey City, NJ
      - Distance from Tappan Zee Bridge Site: 30 Nautical Miles
      - Estimated Number of Shipments: 15

    - Demolition Material: Precast Deck Panels, exodermic deck panels, concrete substructure, concrete pile caps and precast concrete fenders
    - Disposal Shipping Method: Barge

- **Sterling Equipment Inc.**
  - Disposal Locations:
    - Bayshore Recycling , Keasby, New Jersey
      - Distance from Tappan Zee Bridge Site: 45 Nautical Miles
      - Estimated Number of Shipments: 8
  - Demolition Material: Concrete rubble, steel, rebar, timbers
  - Disposal Shipping Method: Barge

Attachment A

Bents 190/191 Plans and Sections

NO CHANGE FROM REVISION 6

Attachment B
Bents 190/191 Site Photos

NO CHANGE FROM REVISION 6

Attachment C
Area Map and Designations

NO CHANGE FROM REVISION 6

Attachment D
Bridge Structure Definitions

NO CHANGE FROM REVISION 6

Attachment E
Demolition Schedule

NO CHANGE FROM REVISION 6

Attachment F
Debris Removal Depiction

NO CHANGE FROM REVISION 6

Attachment G
Turbidity Curtain Detail

NO CHANGE FROM REVISION 6

Attachment H
Debris Containment

NO CHANGE FROM REVISION 6

Attachment I
Timber Pile Removal

NO CHANGE FROM REVISION 6

Attachment J

Sitewide and Area 2 Rockland Causeway Foundation Removal Best Management Practices

NO CHANGE FROM REVISION 6

Attachment K
NYSDEC Required Demolition Limits

NO CHANGE FROM REVISION 6

Attachment L
Salvage Procedure

NO CHANGE FROM REVISION 7

Attachment M
Demolition Equipment on East Anchor Span

NO CHANGE FROM REVISION 7

Attachment N
Pollution Abatement & Containment Removal Plan

NO CHANGE FROM REVISION 7

Attachment O
Preliminary Blast Plan

NO CHANGE FROM REVISION 8

Attachment P
Salvage Plan

NO CHANGE FROM REVISION 8

Attachment Q
Blast Parameters

NO CHANGE FROM REVISION 8

Attachment R
Summary of Environmental Factors

NO CHANGE FROM REVISION 8

Attachment S

Environmental Monitoring during the Controlled Blasting Event

NO CHANGE FROM REVISION 8

Attachment T

TZC's Plan for the use of Scare Charges during the January 2019 Demolition of the Anchor Span

NO CHANGE FROM REVISION 8

Attachment U
Area 1B Means and Methods

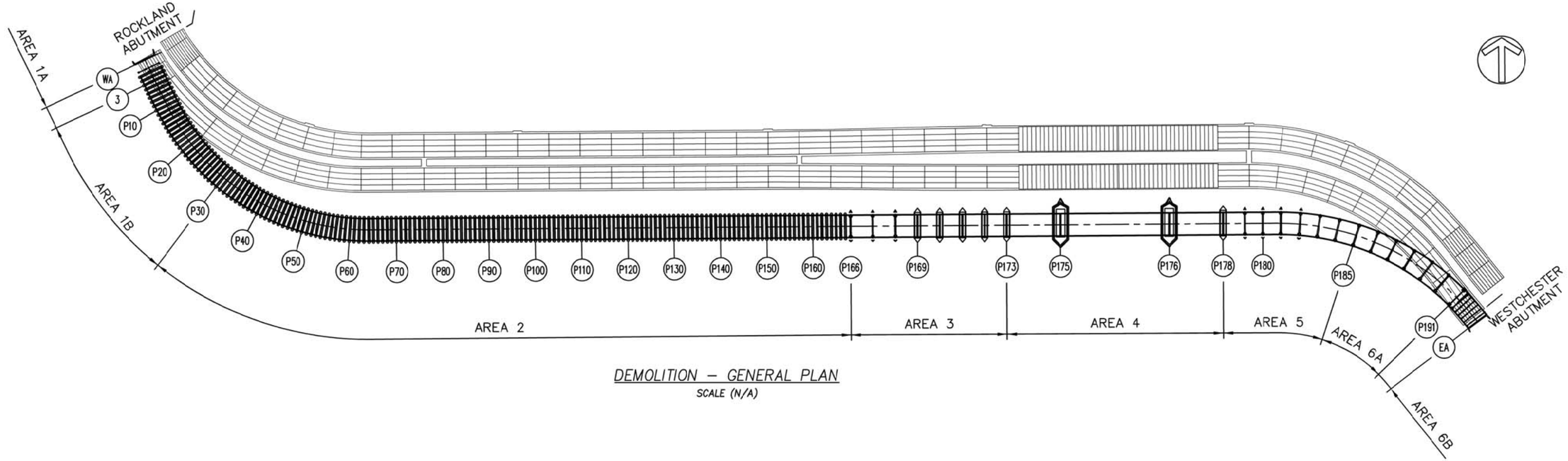

DEMOLITION – GENERAL PLAN

SCALE (N/A)

GENERAL NOTES:

1. THIS DRAWING SET DESCRIBES THE SEQUENCE OF WORK REQUIRED TO REMOVE THE FOUNDATION IN AREA 1B FROM THE BENT 4 TO BENT 18,
2. THE BENTS 19 TO 27 FROM AREA 1B ARE REMOVED AS PER CWP–0652A AND THE BENTS FROM 28 TO 165 WILL BE REMOVED AS PER THE CWP–0652B

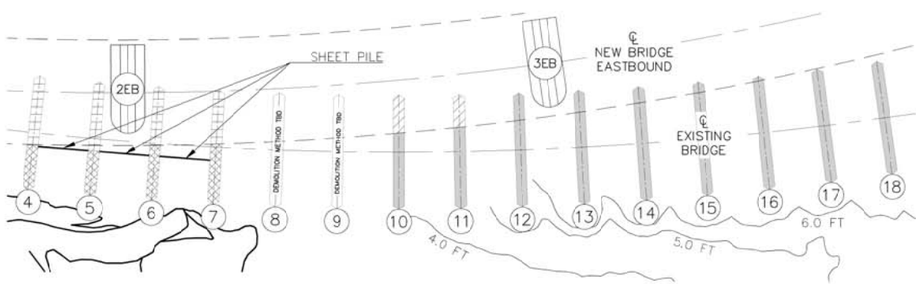

KEY:

- BENT SECTION REMOVED WITH CAT–320 ON ACCESS PLATFORM
- BENT SECTION REMOVED WITH CAT–336 ON LAND
- BENT SECTION REMOVED FROM BARGE WITH KOMATSU PC800
- BENT SECTION REMOVED WITH CAT 336 ON FLEXI

DEMOLITION METHOD BENTS 4 TO 18 – PLAN VIEW

SCALE (1"=125')

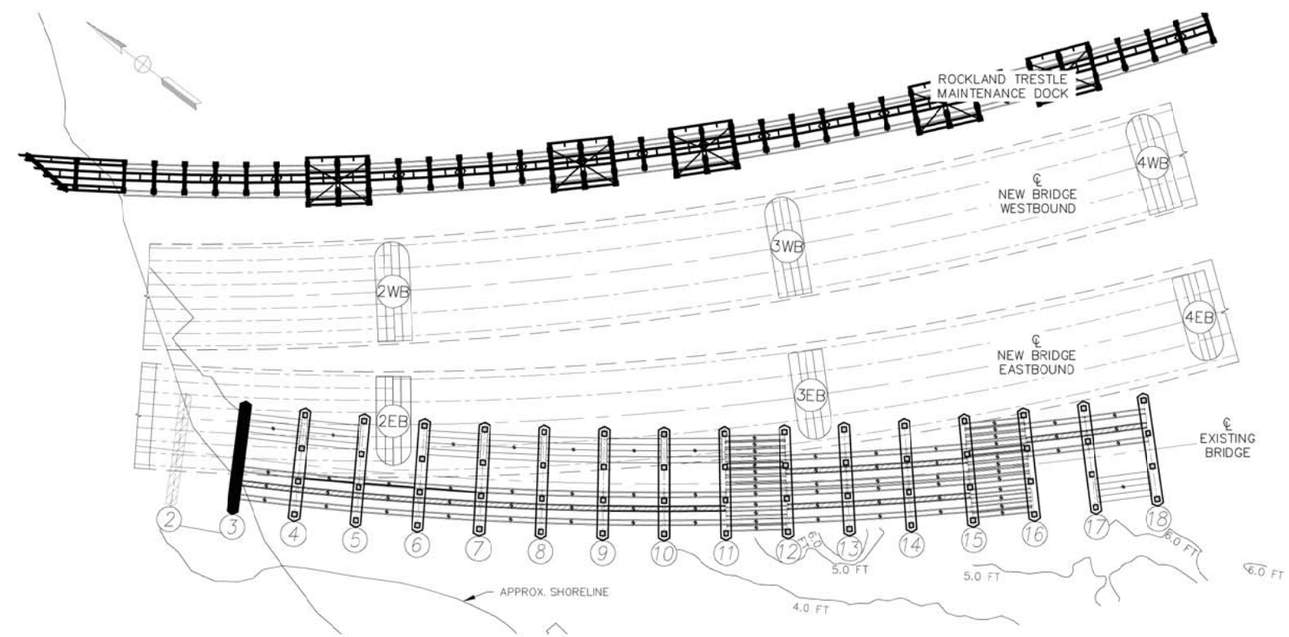

DEMOLITION AREA 1B BENT 4 TO 18 – PLAN VIEW

SCALE (N/A)

ALTERED ON:	AFFIXED ON:
SIGNATURE: STAMP:	SIGNATURE: STAMP:

NEW YORK STATE THRUWAY AUTHORITY
DEPARTMENT OF ENGINEERING
200 SOUTHERN BLVD., ALBANY, NY 12209

TITLE OF PROJECT: THE NEW NY BRIDGE
CONTRACT NUMBER: D214134
LOCATION OF PROJECT: MILEPOST 14.67 +/- IN ROCKLAND & WESTCHESTER COUNTIES

TAPPAN ZEE CONSTRUCTORS, LLC

REVISIONS

REV	DATE	BY	CHK BY	DESCRIPTION
6				
5				
4				
3				
2				
1				

DESIGNED BY: L. BONNO
DESIGN CH'K BY: G. WORDEN
DRAWN BY: L. BONNO
DRAWING CH'K BY: G. WORDEN
SUPERVISOR: B. YAFFEE

TITLE OF DRAWING: TAPPAN ZEE BRIDGE FOUNDATION DEMO AREA 1B PLAN VIEWS

DATE: 10/08/2018
DRAWING NUMBER: TZC-652C-001
REVISION: 00

DOCUMENT TRACKING CODE:

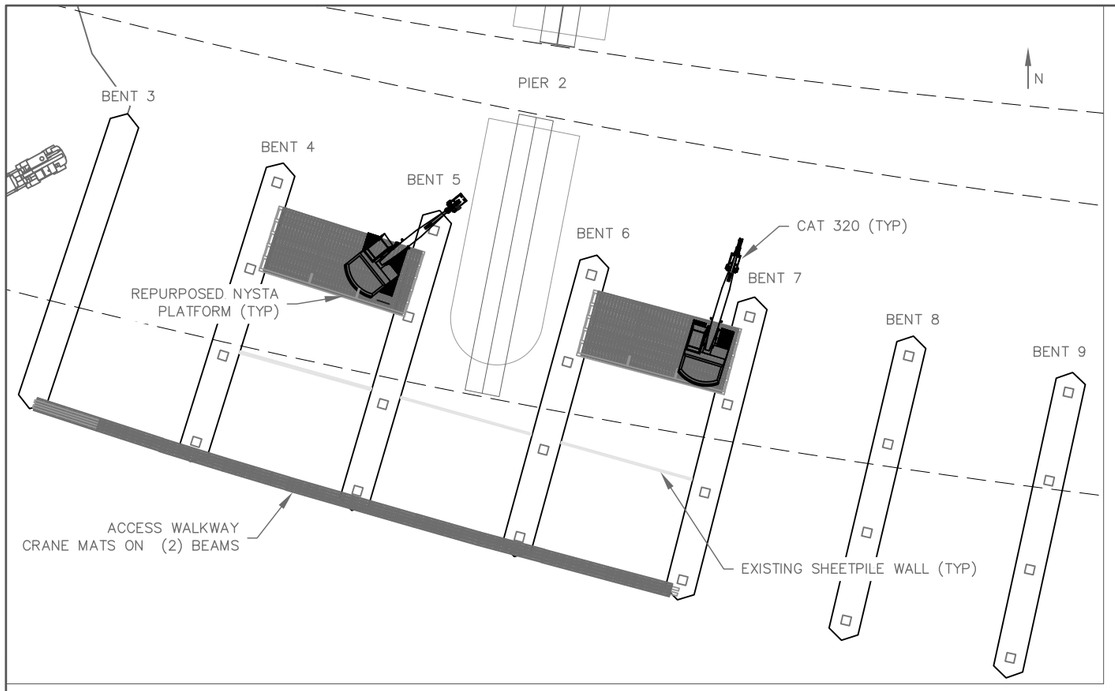

STEP 1: HAMMER AVAILABLE PILE CAP

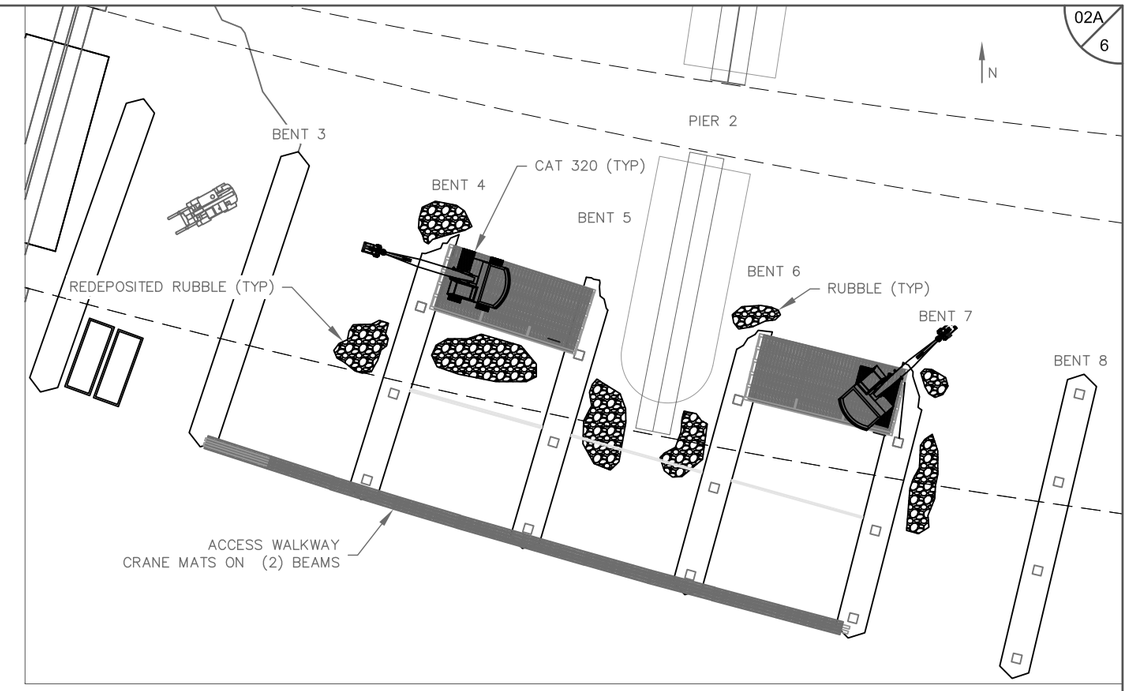

STEP 2: PULL PILE, RELOCATE RUBBLE

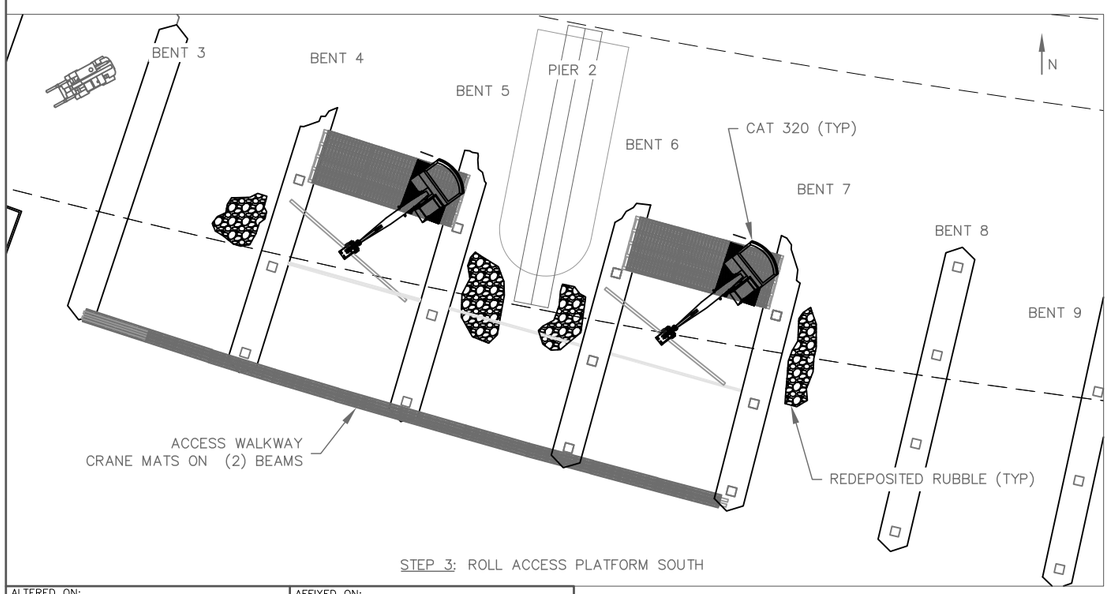

STEP 3: ROLL ACCESS PLATFORM SOUTH

NOTES:
1. FULL DEPTH TURBIDITY CURTAIN REQUIRED FOR ALL FOUNDATION WORK.
2. TIMBER PILES TO BE PLACED IN DUMPSTERS.
3. RUBBLE TO BE HAULED OUT IN TRI-AXLES.

STEPS:
1. CAT 320 ON ACCESS PLATFORM HAMMERS AVAILABLE PILE CAP.
2. CAT 320 PULLS PILE TO REQUIRED DEMO LIMIT, CLAMS RUBBLE AND DEPOSITS IT TO THE SOUTH.
3. UPON REMOVAL OF AVAILABLE PILE AND SHIFTING OF AVAILABLE RUBBLE, CAT 320 SHIFTS ACCESS PLATFORM TO THE SOUTH. CRANE MATS MAY BE CUT OR SLID. BEAM TO BE PICKED AND RESECURED TO THE SOUTH. REPEAT STEPS 1–2 WALKING THE PLATFORM AND THE CAT 320 TO THE SOUTH. BUILD A RUBBLE PAD AND PLACE CRANE MATS ON TOP OF RUBBLE.
4. WALK CAT 320 OFF OF ACCESS PLATFORM ONTO MATTED OUT RUBBLE PAD. REMOVE ACCESS PLATFORM. REMOVE REMAINING PILES AND RUBBLE WHICH SUPPORTED ACCESS PLATFORM.
5. CONTINUE FOUNDATION REMOVAL FROM BENT 7 TO BENT 4. WORK EAST TO WEST REMOVING ALL PILES, CRANE MATS, AND RUBBLE. CAT 320 TO FEED CAT 336. CAT 336 TO PLACE RUBBLE IN TRUCKS AND PILES IN DUMPSTERS.

AREA 1B FOUNDATION REMOVAL, BENTS 4–7			
BENT	# OF PILES	PILE TIP EL (FT)	DEMO LIMIT (EL, FT)
4	79	–1'–0"	–10'–0"
5	78	–1'–0"	–10'–0"
6	77	–1'–0"	–10'–0"
7	76	–1'–0"	–10'–0"

AREA 1B FOUNDATION REMOVAL, BENTS 4–7, STEPS 1–3

ALTERED ON:
SIGNATURE:
STAMP:

AFFIXED ON:
SIGNATURE:
STAMP:

NEW YORK STATE THRUWAY AUTHORITY
DEPARTMENT OF ENGINEERING
200 SOUTHERN BLVD., ALBANY, NY 12209

TITLE OF PROJECT: THE NEW NY BRIDGE
CONTRACT NUMBER: D214134
LOCATION OF PROJECT: MILEPOST 14.67 +/- IN ROCKLAND & WESTCHESTER COUNTIES

TAPPAN ZEE CONSTRUCTORS, LLC

REVISIONS

REV	DATE	BY	CHK BY	DESCRIPTION
6				
5				
4				
3				
2				
1				

DESIGNED BY: G. WORDEN
DESIGN CH'K BY: A. REEVE
DRAWN BY: G. WORDEN
DRAWING CH'K BY: A. REEVE
SUPERVISOR: B.YAFFEE

TITLE OF DRAWING
TZC DEMOLITION WORKS
A1B FOUNDATIONS
BENTS 4-7
STEPS 1-3

DATE: 12/10/2018
DRAWING NUMBER:
REVISION: 0

DOCUMENT TRACKING CODE:

October 10, 2018 - 10:41 AM C:\Users\wor38157\Desktop\1B\Rockland Trestle Removal.dwg

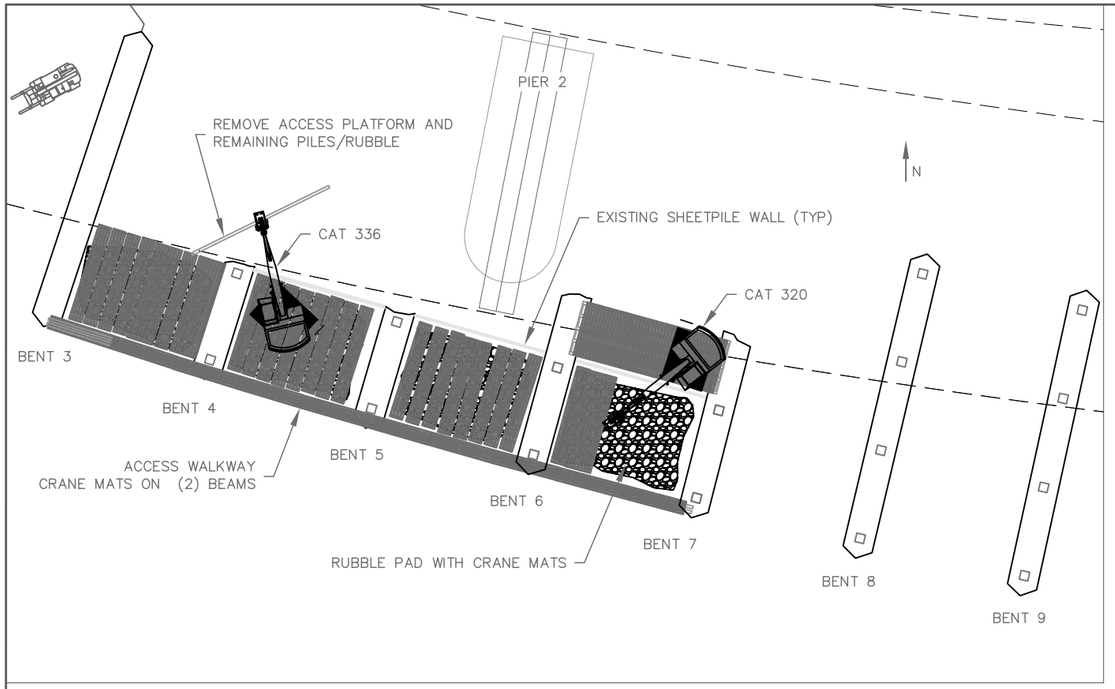

STEP 4: BUILD RUBBLE PAD WITH MATS TO THE SOUTH OF ACCESS PLATFORM, WALK CAT 320 OFF PLATFORM, REMOVE ACCESS PLATFORM

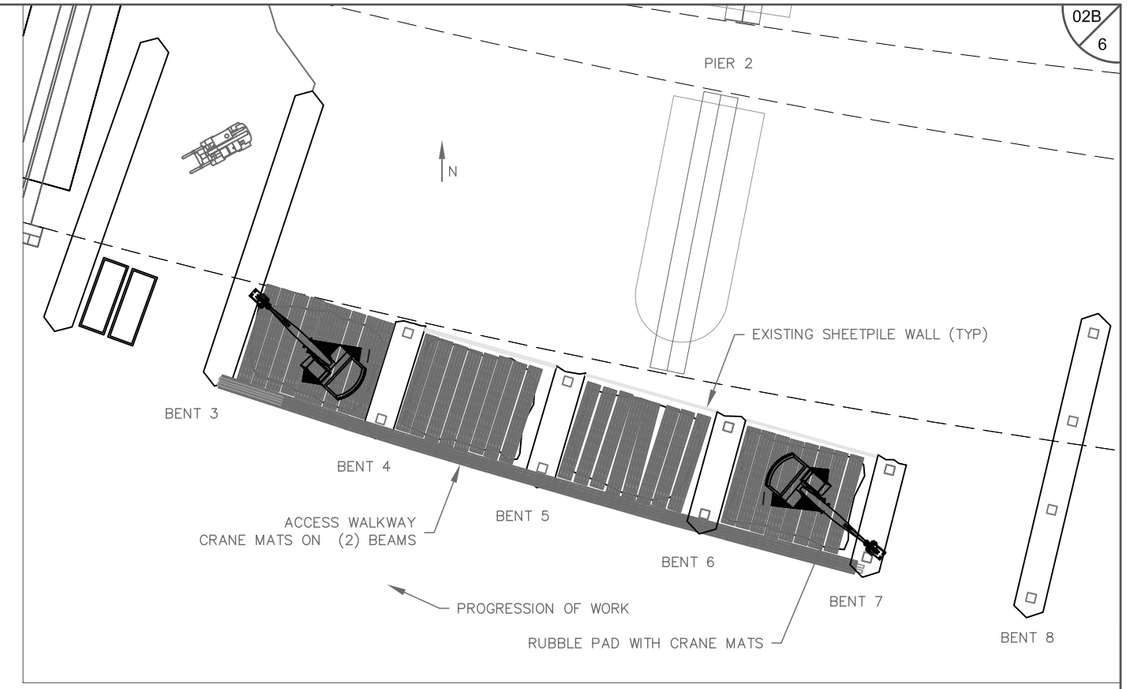

STEP 5: CONTINUE FOUNDATION REMOVAL, WORK BACK TO BENT 3, LOAD OUT MATERIAL

NOTES:
1. FULL DEPTH TURBIDITY CURTAIN REQUIRED FOR ALL FOUNDATION WORK.
2. TIMBER PILES TO BE PLACED IN DUMPSTERS.
3. RUBBLE TO BE HAULED OUT IN TRI-AXLES.

STEPS:
1. CAT 320 ON ACCESS PLATFORM HAMMERS AVAILABLE PILE CAP.
2. CAT 320 PULLS PILE TO REQUIRED DEMO LIMIT, CLAMS RUBBLE AND DEPOSITS IT TO THE SOUTH.
3. UPON REMOVAL OF AVAILABLE PILE AND SHIFTING OF AVAILABLE RUBBLE, CAT 320 SHIFTS ACCESS PLATFORM TO THE SOUTH. CRANE MATS MAY BE CUT OR SLID. BEAM TO BE PICKED AND RESECURED TO THE SOUTH. REPEAT STEPS 1-2 WALKING THE PLATFORM AND THE CAT 320 TO THE SOUTH. BUILD A RUBBLE PAD AND PLACE CRANE MATS ON TOP OF RUBBLE.
4. WALK CAT 320 OFF OF ACCESS PLATFORM ONTO MATTED OUT RUBBLE PAD. REMOVE ACCESS PLATFORM. REMOVE REMAINING PILES AND RUBBLE WHICH SUPPORTED ACCESS PLATFORM.
5. CONTINUE FOUNDATION REMOVAL FROM BENT 7 TO BENT 4. WORK EAST TO WEST REMOVING ALL PILES, CRANE MATS, AND RUBBLE. CAT 320 TO FEED CAT 336. CAT 336 TO PLACE RUBBLE IN TRUCKS AND PILES IN DUMPSTERS.

AREA 1B FOUNDATION REMOVAL, BENTS 4-7			
BENT	# OF PILES	PILE TIP EL (FT)	DEMO LIMIT (EL, FT)
4	79	-1'-0"	-10'-0"
5	78	-1'-0"	-10'-0"
6	77	-1'-0"	-10'-0"
7	76	-1'-0"	-10'-0"

AREA 1B FOUNDATION REMOVAL, BENTS 4-7, STEPS 4-5

ALTERED ON:	AFFIXED ON:
SIGNATURE: STAMP:	SIGNATURE: STAMP:

NEW YORK STATE THRUWAY AUTHORITY
DEPARTMENT OF ENGINEERING
200 SOUTHERN BLVD., ALBANY, NY 12209

TITLE OF PROJECT: THE NEW NY BRIDGE
CONTRACT NUMBER: D214134
LOCATION OF PROJECT: MILEPOST 14.67 +/- IN ROCKLAND & WESTCHESTER COUNTIES

TAPPAN ZEE CONSTRUCTORS, LLC

REVISIONS

REV	DATE	BY	CHK BY	DESCRIPTION
6				
5				
4				
3				
2				
1				

DESIGNED BY: G. WORDEN
DESIGN CH'K BY: A. REEVE
DRAWN BY: G. WORDEN
DRAWING CH'K BY: A. REEVE
SUPERVISOR: B.YAFFEE

TITLE OF DRAWING
TZC DEMOLITION WORKS
A1B FOUNDATIONS
BENTS 4-7
STEPS 1-3

DATE: 12/10/2018
DRAWING NUMBER:
REVISION: 0

DOCUMENT TRACKING CODE:

October 10, 2018 - 10:41 AM C:\Users\wor38157\Desktop\1B\Rockland Trestle Removal.dwg

NOTES:
1. EXTREME HEADROOM CONSTRAINTS. EXHIBIT EXTREME CAUTION WHEN OPERATING UNDER NEW BRIDGE.

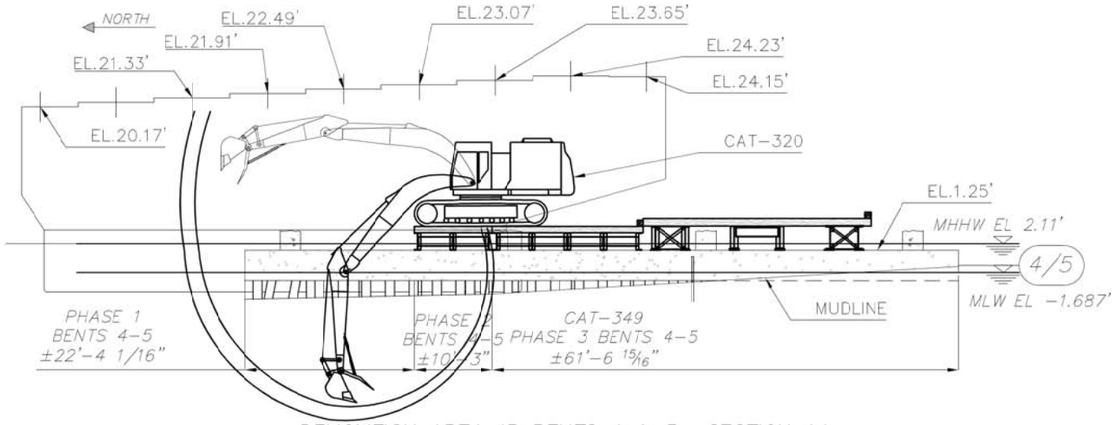

DEMOLITION AREA 1B BENTS 4 & 5 -SECTION AA

SCALE (1"=20')

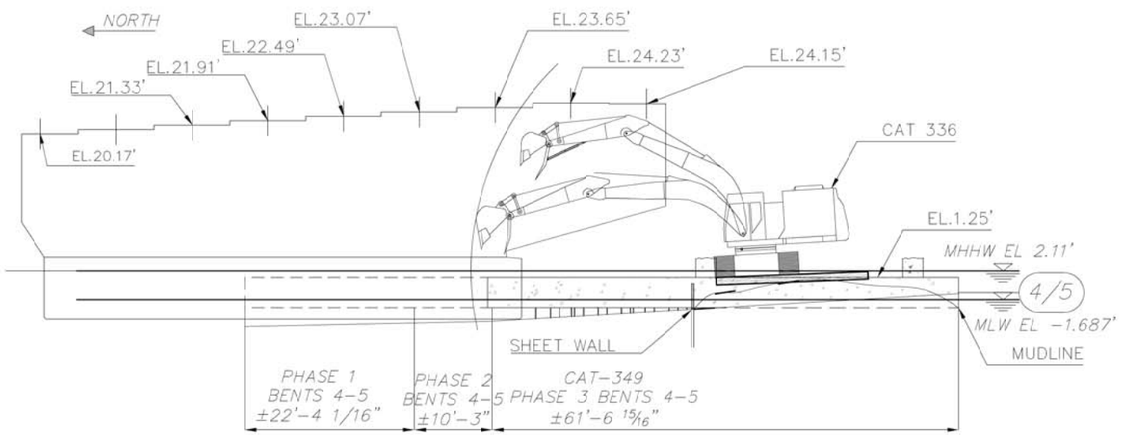

DEMOLITION AREA 1B BENTS 4 & 5 -SECTION BB

SCALE (1"=20')

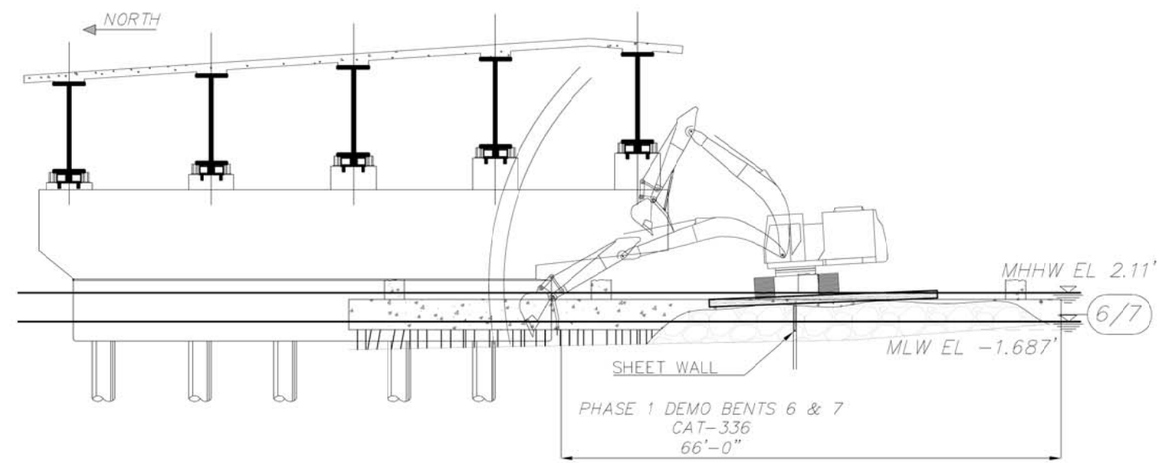

DEMOLITION AREA 1B BENTS 6 & 7 -SECTION CC

SCALE (1"=20')

ALTERED BY:	MODIFIED BY:
SIGNATURE: STAMP:	SIGNATURE: STAMP:

NEW YORK STATE THRUWAY AUTHORITY
DEPARTMENT OF ENGINEERING
200 SOUTHERN BLVD., ALBANY, NY 12209

TITLE OF PROJECT: THE NEW NY BRIDGE
CONTRACT NUMBER: D214134
LOCATION OF PROJECT: MILEPOST 14.67 +/- IN ROCKLAND & WESTCHESTER COUNTIES

TAPPAN ZEE CONSTRUCTORS, LLC

REVISIONS

REV	DATE	BY	CHK BY	DESCRIPTION
6				
5				
4				
3				
2				
1				

DESIGNED BY:	L. BONNO
DESIGN CH'K BY:	G. WORDEN
DRAWN BY:	L. BONNO
DRAWING CH'K BY:	G. WORDEN
SUPERVISOR:	B. YAFFEE

TITLE OF DRAWING: TAPPAN ZEE BRIDGE FOUNDATION DEMO AREA 1B HEADROOM CONSTRAINTS

DATE: 10/08/2018

DRAWING NUMBER: TZC-652C-003

REVISION: 00

DOCUMENT TRACKING CODE:

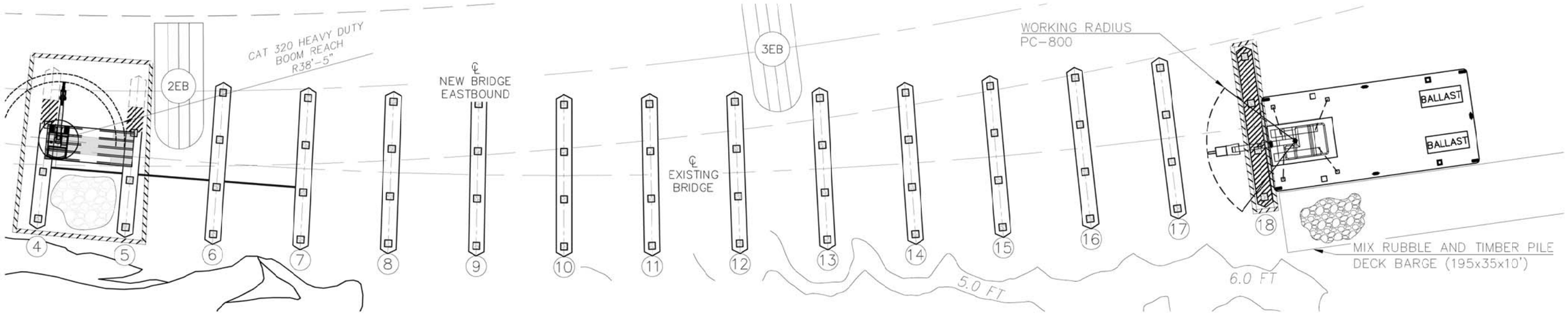

DEMOLITION AREA 1B – FULL REMOVAL BENTS 18 TO 12

SCALE (1"=60')

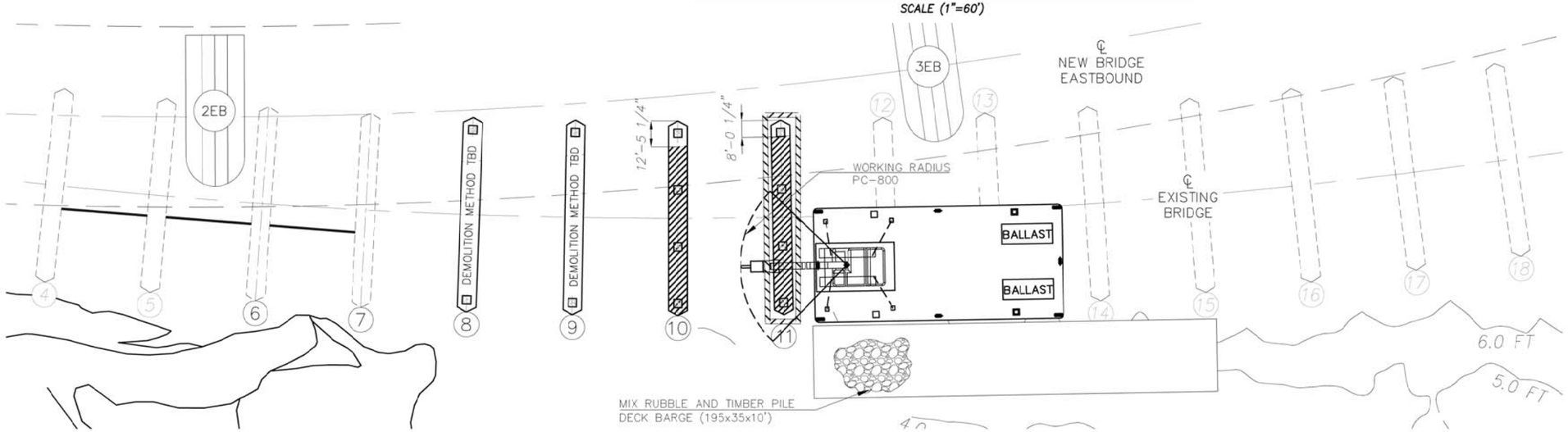

EQUIPMENT:
- KOMATSU PC 800-LC ON A BARGE,
- DISPOSAL DECK BARGE (195x35').

DEMOLITION AREA 1B – PARTIAL REMOVAL BENTS 10 & 11

SCALE (1"=60')

GENERAL NOTES:

1. AS SOON AS THE TEMPORARY TRESTLE IS REMOVED, THE DEMOLITION (CAPS AND TIMBER) OF THE BENTS CAN START FROM 18 TO 12 WITH THE EXCAVATOR PC 800-LC.
2. ALL THE DISPOSAL WILL BE RETRIEVED BY THE PC 800-LC AND WILL BE LOAD ON A DECK BARGE.
3. FOR BENTS 10 AND 11, THE EXCAVATOR PC 800-LC WILL DEMOLISH AND RETRIEVE THE ACCESSIBLE SOUTH END OF THE BENTS.
4. BENTS 8 AND 9 MAY BE REMOVED USING THE SAME METHODS USED FOR BENTS 4-7 OR THE METHODS USED FOR 10 AND 11 BASED ON THE AVAILABILITY OF SAFE ACCESS FOR EQUIPMENT.

ALTERED ON:	REVISED ON:
SIGNATURE: STAMP:	SIGNATURE: STAMP:

NEW YORK STATE THRUWAY AUTHORITY
DEPARTMENT OF ENGINEERING
200 SOUTHERN BLVD., ALBANY, NY 12209

TITLE OF PROJECT: THE NEW NY BRIDGE
CONTRACT NUMBER: D214134
LOCATION OF PROJECT: MILEPOST 14.67 +/- IN ROCKLAND & WESTCHESTER COUNTIES

TAPPAN ZEE CONSTRUCTORS, LLC

REVISIONS

REV	DATE	BY	CHK BY	DESCRIPTION
6				
5				
4				
3				
2				
1				

DESIGNED BY: L. BONNO
DESIGN CH'K BY: G. WORDEN
DRAWN BY: L. BONNO
DRAWING CH'K BY: G. WORDEN
SUPERVISOR: B. YAFFEE

TITLE OF DRAWING: TAPPAN ZEE BRIDGE FOUNDATION DEMO AREA 1B BENTS 8-18

DATE: 10/08/2018
DRAWING NUMBER: TZC-652C-004
REVISION: 00

DOCUMENT TRACKING CODE:

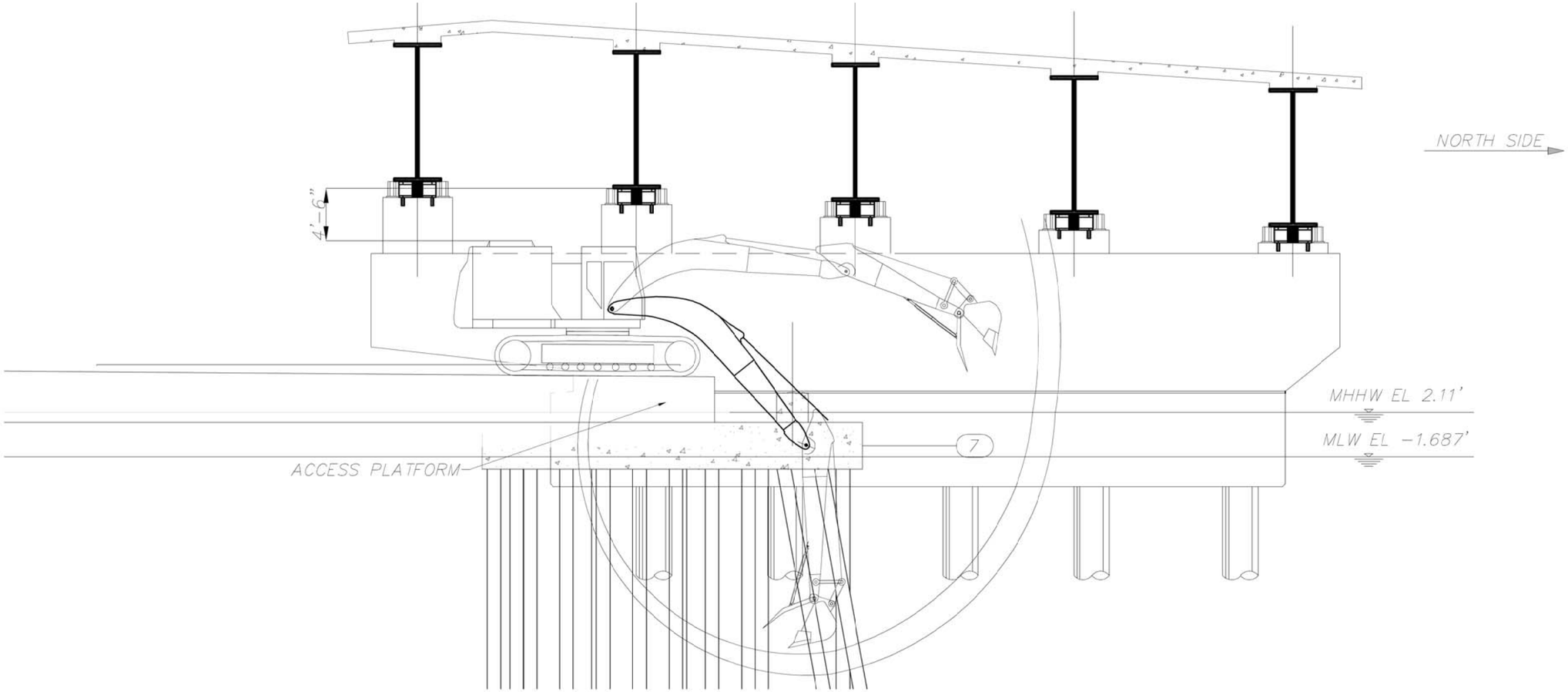

DEMOLITION AREA 1B – REMOVAL OF BENT 7

SCALE (1"=10')

ALTERED ON:	ALTERED ON:
SIGNATURE: STAMP:	SIGNATURE: STAMP:

NEW YORK STATE THRUWAY AUTHORITY
DEPARTMENT OF ENGINEERING
200 SOUTHERN BLVD., ALBANY, NY 12209

TITLE OF PROJECT: THE NEW NY BRIDGE

CONTRACT NUMBER: D214134

LOCATION OF PROJECT: MILEPOST 14.67 +/- IN ROCKLAND & WESTCHESTER COUNTIES

TAPPAN ZEE CONSTRUCTORS, LLC

REVISIONS

REV	DATE	BY	CHK BY	DESCRIPTION
6				
5				
4				
3				
2				
1				

DESIGNED BY: L. BONNO
DESIGN CH'K BY: G. WORDEN
DRAWN BY: L. BONNO
DRAWING CH'K BY: G. WORDEN
SUPERVISOR: B. YAFFEE

TITLE OF DRAWING: TAPPAN ZEE BRIDGE FOUNDATION DEMO AREA 1B BENT 7 REMOVAL

DATE: 10/08/2018

DRAWING NUMBER: TZC-652C-005

REVISION: 00

DOCUMENT TRACKING CODE:

Attachment V
East Anchor Span Sediment Displacement

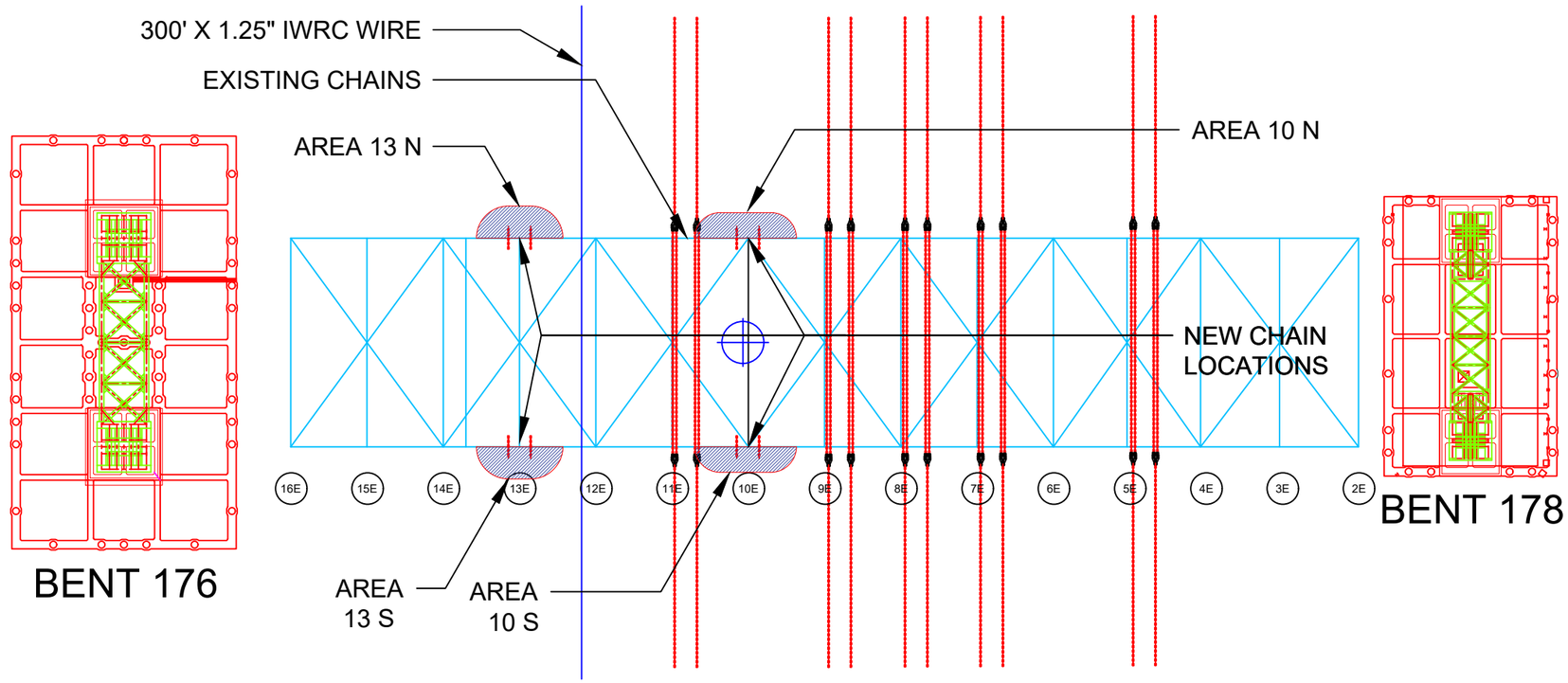

*STEEL MEMBER TO BE REMOVED NOT SHOWN

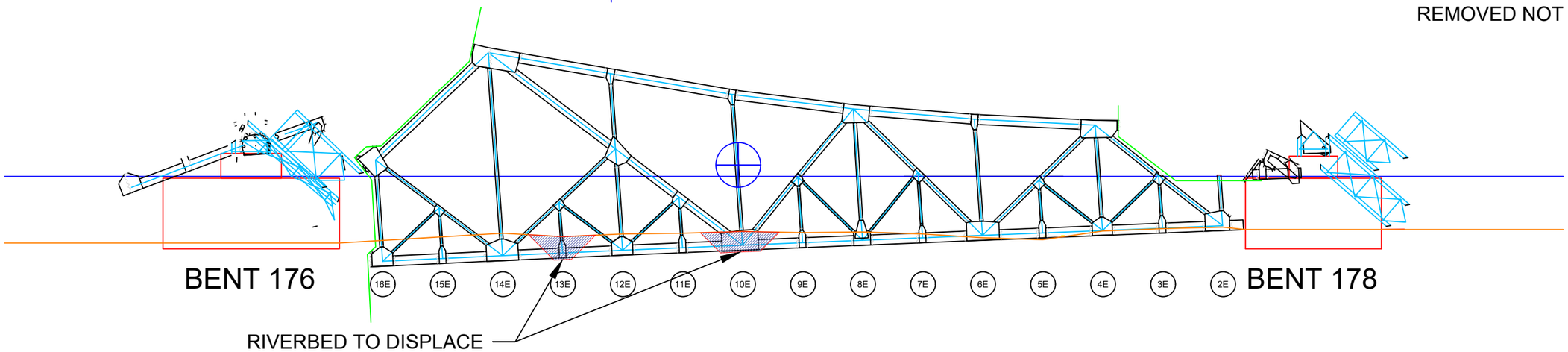

GENERAL NOTES:
1. As-Built lowered truss location differs from planned lowered truss location
2. Lifting locations with adequate structural integrity are outside the location where the chains were previously placed
3. TZC to perform sediment displacement using a digging crane to allow new chains to be placed under 2 areas – 13N/S and 10N/S – of the East Anchor Span
4. TZC will use a heavy digging bucket to move material, at no time will the bucket be raised up out of the water or opened into the water column.
5. The estimated volume of material to be displacement is approximately 350 cy.
6. All work will be performed in accordance with Section 9.2 of the NYSDEC Demolition Plan allowing for sediment displacement in Area 4

RESOLVE MARINE GROUP Inc
1510 SE 17TH STREET • FT LAUD. FL. 33316
TEL: (954) 764-8700 • FAX: (954) 764-8724
WWW.RESOLVEMARINE.COM

DRAWN: TMR	RMG TAPPAN ZEE	APPRVD: —
DATE: 01/19/19		DATE: —

TRENCH OVERVIEW
PLAN AND PROFILE VIEWS

SCALE:	SHEET:	REV.	DRAWING NUMBER:
NONE	1 OF 7	A	#

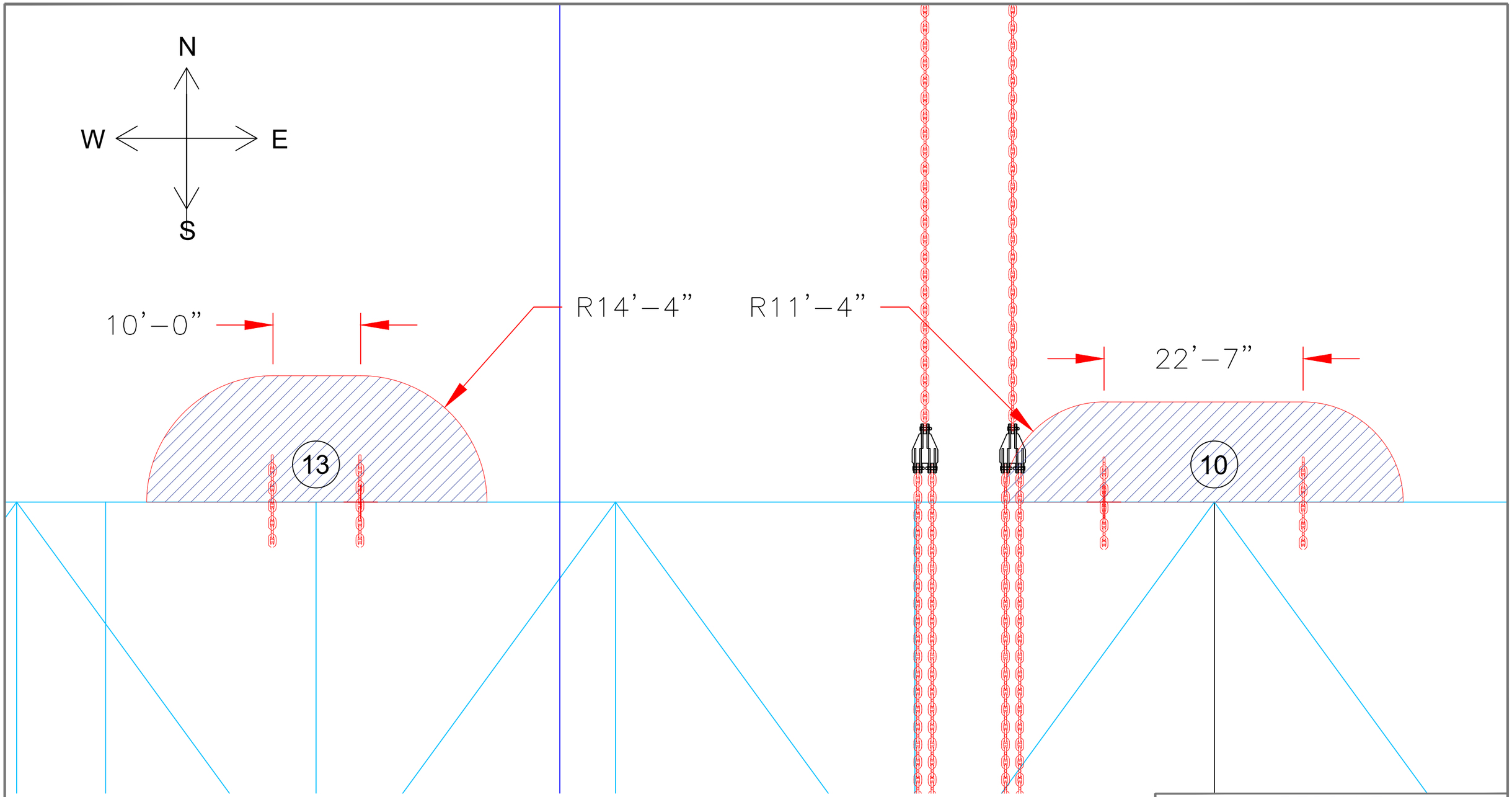

*NORTH SIDE SHOWN
MIRROR ON SOUTH SIDE

*CENTER TRENCH ON
EACH RESPECTIVE
KNUCKLE

RESOLVE
MARINE GROUP INC.
1510 SE 17TH STREET • FT LAUD. FL. 33316
TEL: (954) 764-8700 • FAX: (954) 764-8724
WWW.RESOLVEMARINE.COM

DRAWN: TMR	RMG TAPPAN ZEE	APPRVD: —
DATE: 01/19/19		DATE: —

PRELIMINARY TRENCH DIMENSIONS
PLAN VIEW

SCALE:	SHEET:	REV.	DRAWING NUMBER:
NONE	2 OF 7	A	#

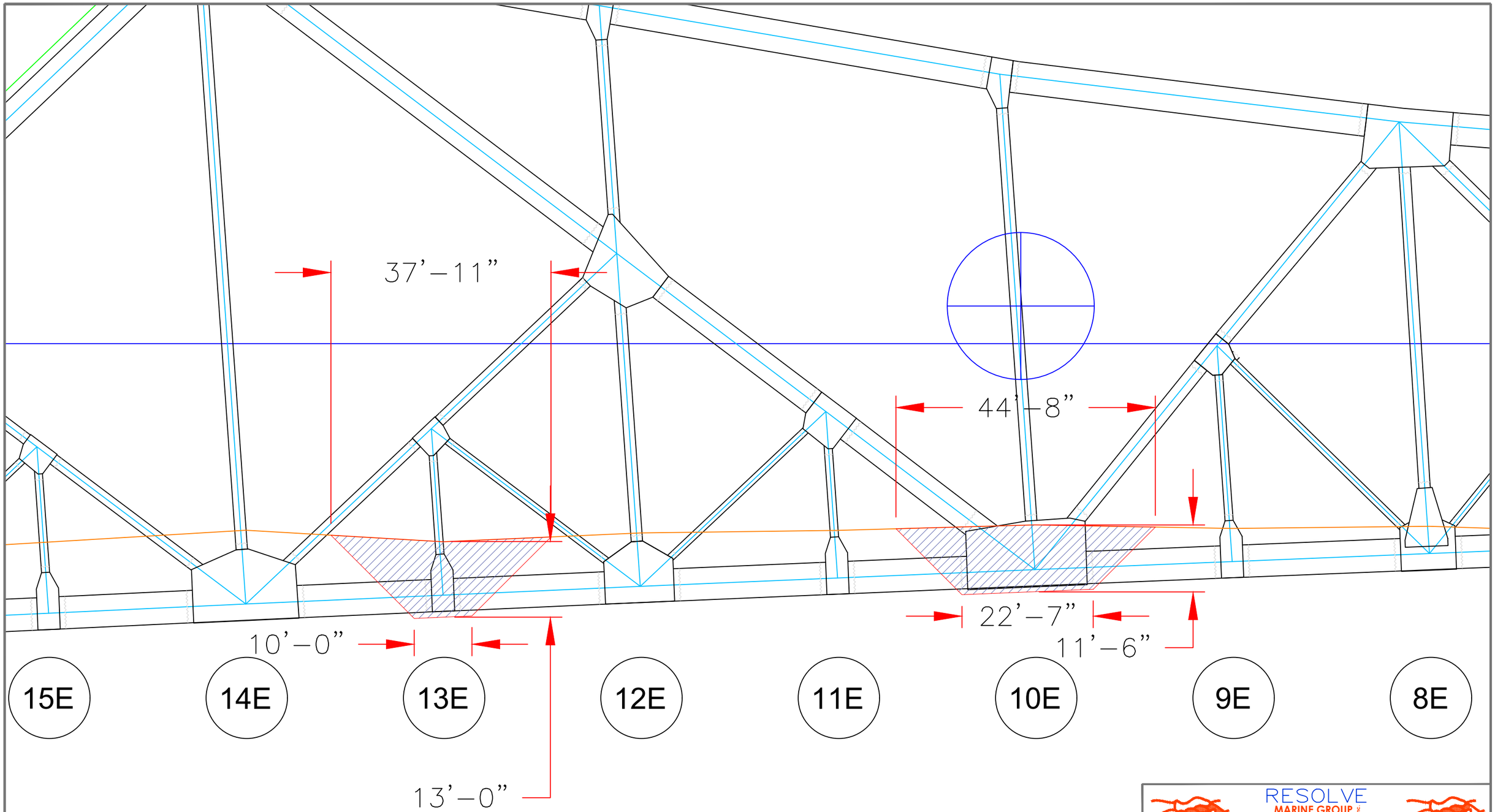

*VIEW SHOWN AT PLANE OF CHORD

*CENTER TRENCH ON EACH RESPECTIVE KNUCKLE

PROPRIETARY NOTICE

THIS DRAWING AND ITS CONTENTS, SPECIFICATIONS, AND DESIGN CONCEPT ARE PROPRIETARY INFORMATION AND THE EXCLUSIVE PROPERTY OF RESOLVE MARINE GROUP. THIS INFORMATION MAY NOT BE DUPLICATED, TRANSFERRED, OR ISSUED FOR MANUFACTURE WITHOUT THE EXPRESSED WRITTEN CONSENT OF RESOLVE MARINE GROUP.

RESOLVE
MARINE GROUP Inc
1510 SE 17TH STREET • FT LAUD. FL. 33316
TEL: (954) 764-8700 • FAX: (954) 764-8724
WWW.RESOLVEMARINE.COM

DRAWN: TMR	RMG TAPPAN ZEE	APPRVD: —
DATE: 01/19/19		DATE: —

PRELIMINARY TRENCH DIMENSIONS
PROFILE VIEW

SCALE:	SHEET:	REV.	DRAWING NUMBER:
NONE	3 OF 7	A	#

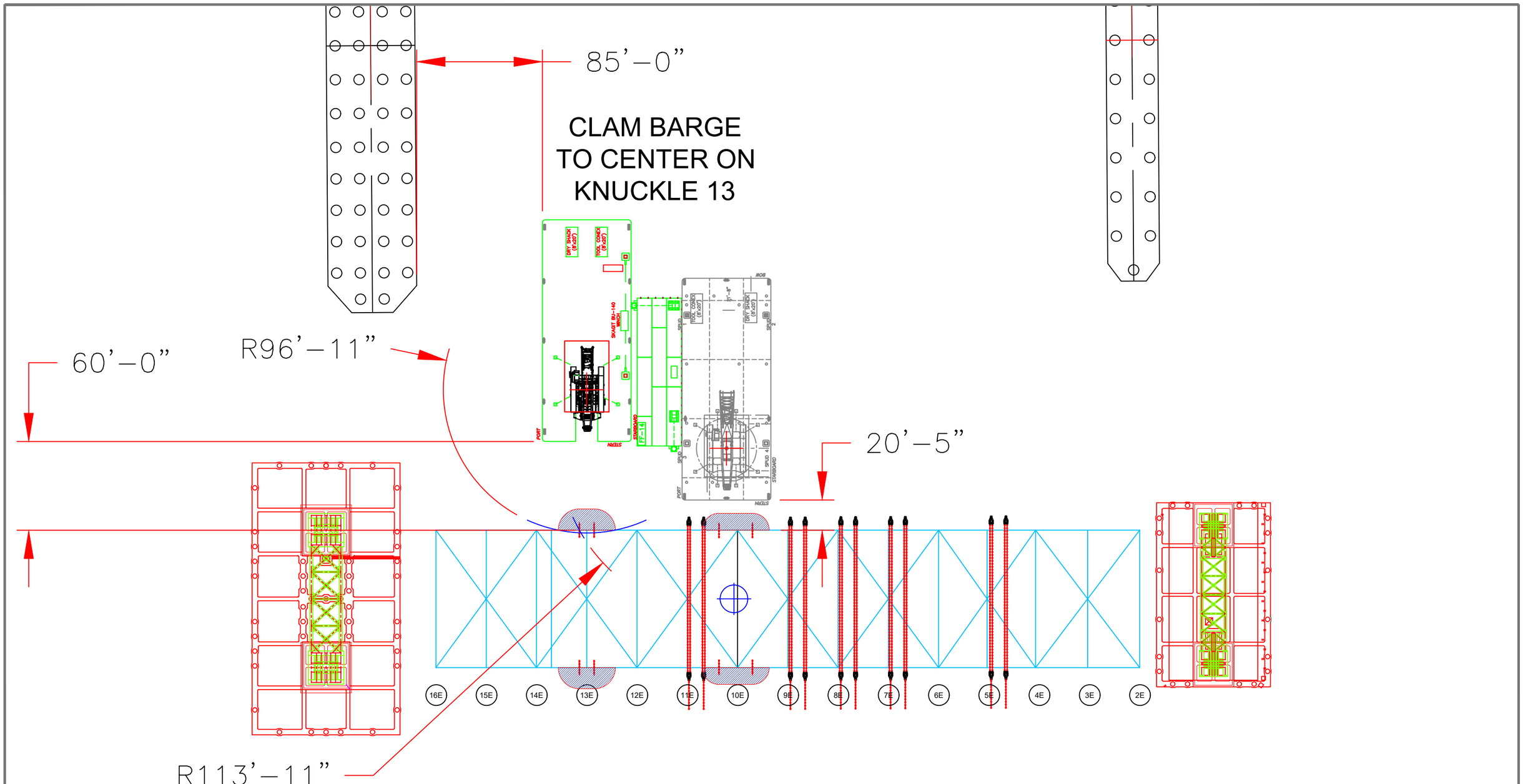

RESOLVE
MARINE GROUP Inc
1510 SE 17TH STREET • FT LAUD. FL. 33316
TEL: (954) 764–8700 • FAX: (954) 764–8724
WWW.RESOLVEMARINE.COM

PROPRIETARY NOTICE

THIS DRAWING AND ITS CONTENTS, SPECIFICATIONS, AND DESIGN CONCEPT ARE PROPRIETARY INFORMATION AND THE EXCLUSIVE PROPERTY OF RESOLVE MARINE GROUP. THIS INFORMATION MAY NOT BE DUPLICATED, TRANSFERRED, OR ISSUED FOR MANUFACTURE WITHOUT THE EXPRESSED WRITTEN CONSENT OF RESOLVE MARINE GROUP.

DRAWN: TMR	RMG TAPPAN ZEE	APPRVD: —
DATE: 01/19/19		DATE: —

TRENCH VESSEL LAYOUT
AREA 13N

SCALE:	SHEET:	REV.	DRAWING NUMBER:
NONE	4 OF 7	A	#

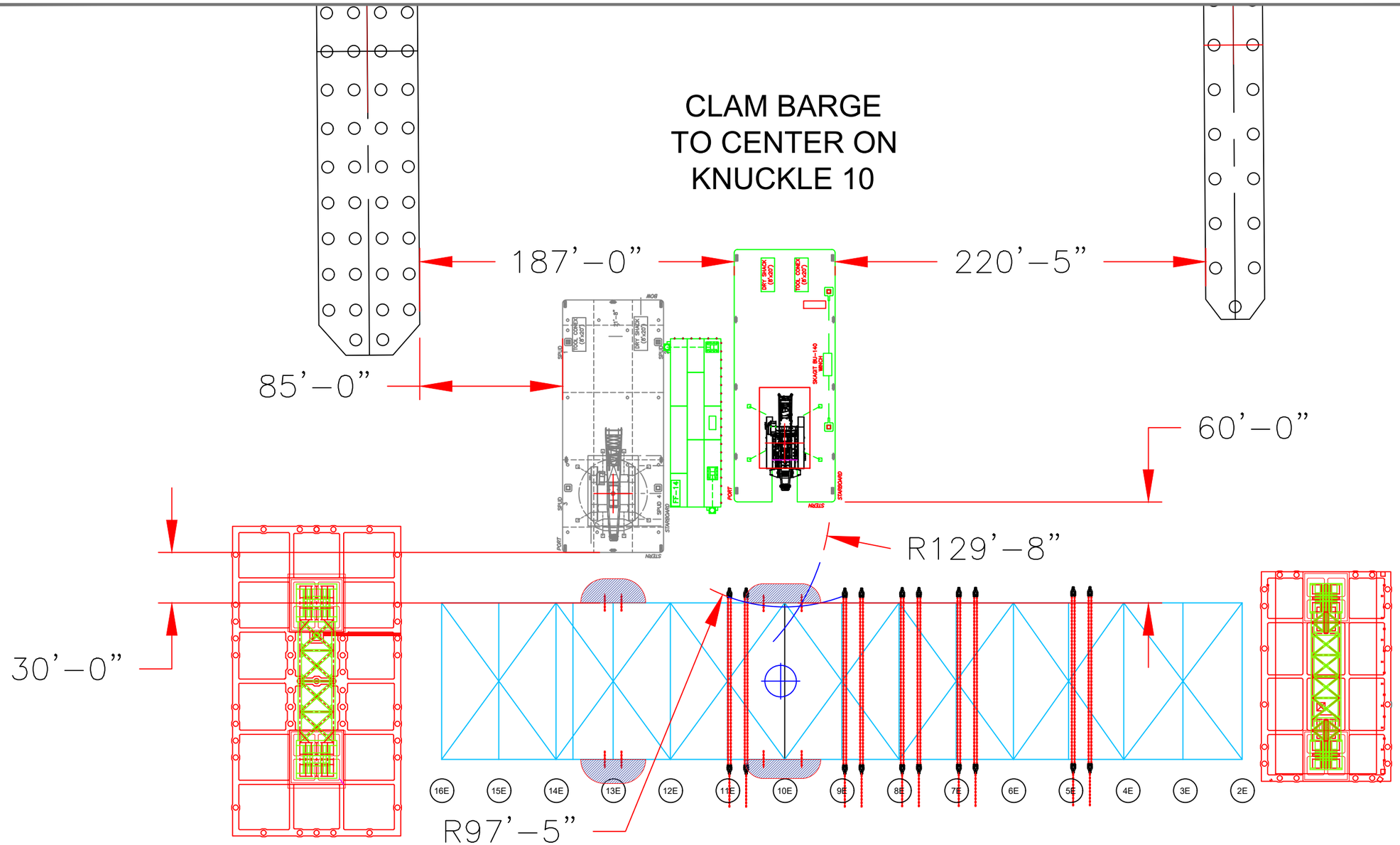

*FF14 (DIVE BARGE) IS TO REMAIN IN POSITION FROM LAST STEP

RESOLVE
MARINE GROUP Inc
1510 SE 17TH STREET • FT LAUD. FL. 33316
TEL: (954) 764–8700 • FAX: (954) 764–8724
WWW.RESOLVEMARINE.COM

DRAWN: TMR	RMG TAPPAN ZEE	APPRVD: —
DATE: 01/19/19		DATE: —

TRENCH VESSEL LAYOUT
AREA 10N

SCALE:	SHEET:	REV.	DRAWING NUMBER:
NONE	5 OF 7	A	#

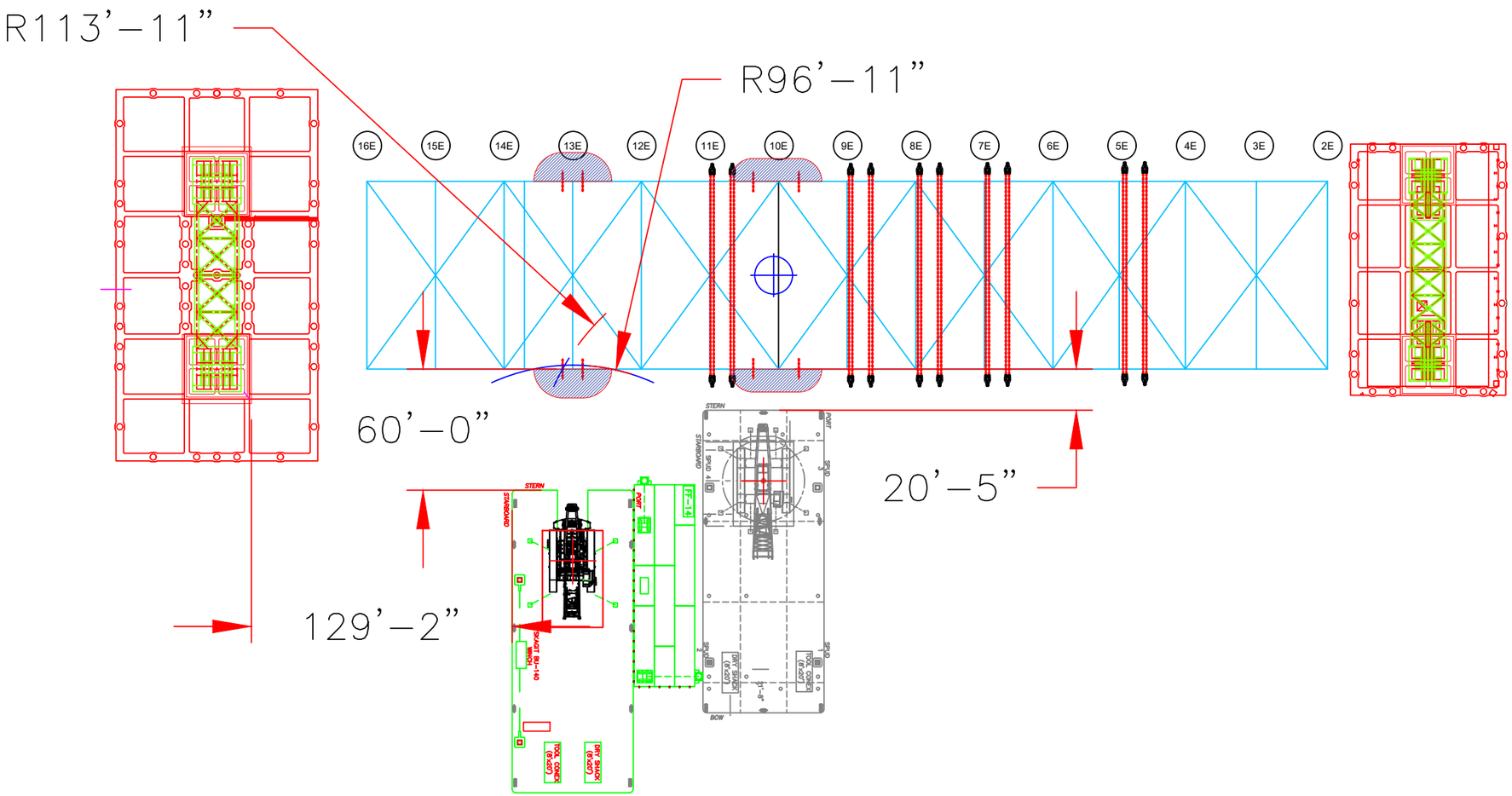

CLAM BARGE
TO CENTER ON
KNUCKLE 13

PROPRIETARY NOTICE

THIS DRAWING AND ITS CONTENTS, SPECIFICATIONS, AND DESIGN CONCEPT ARE PROPRIETARY INFORMATION AND THE EXCLUSIVE PROPERTY OF RESOLVE MARINE GROUP. THIS INFORMATION MAY NOT BE DUPLICATED, TRANSFERRED, OR ISSUED FOR MANUFACTURE WITHOUT THE EXPRESSED WRITTEN CONSENT OF RESOLVE MARINE GROUP.

RESOLVE
MARINE GROUP INC.
1510 SE 17TH STREET • FT LAUD. FL. 33316
TEL: (954) 764–8700 • FAX: (954) 764–8724
WWW.RESOLVEMARINE.COM

DRAWN: TMR	RMG TAPPAN ZEE	APPRVD: —
DATE: 01/19/19		DATE: —

TRENCH VESSEL LAYOUT
AREA 13S

SCALE:	SHEET:	REV.	DRAWING NUMBER:
NONE	6 OF 7	A	#

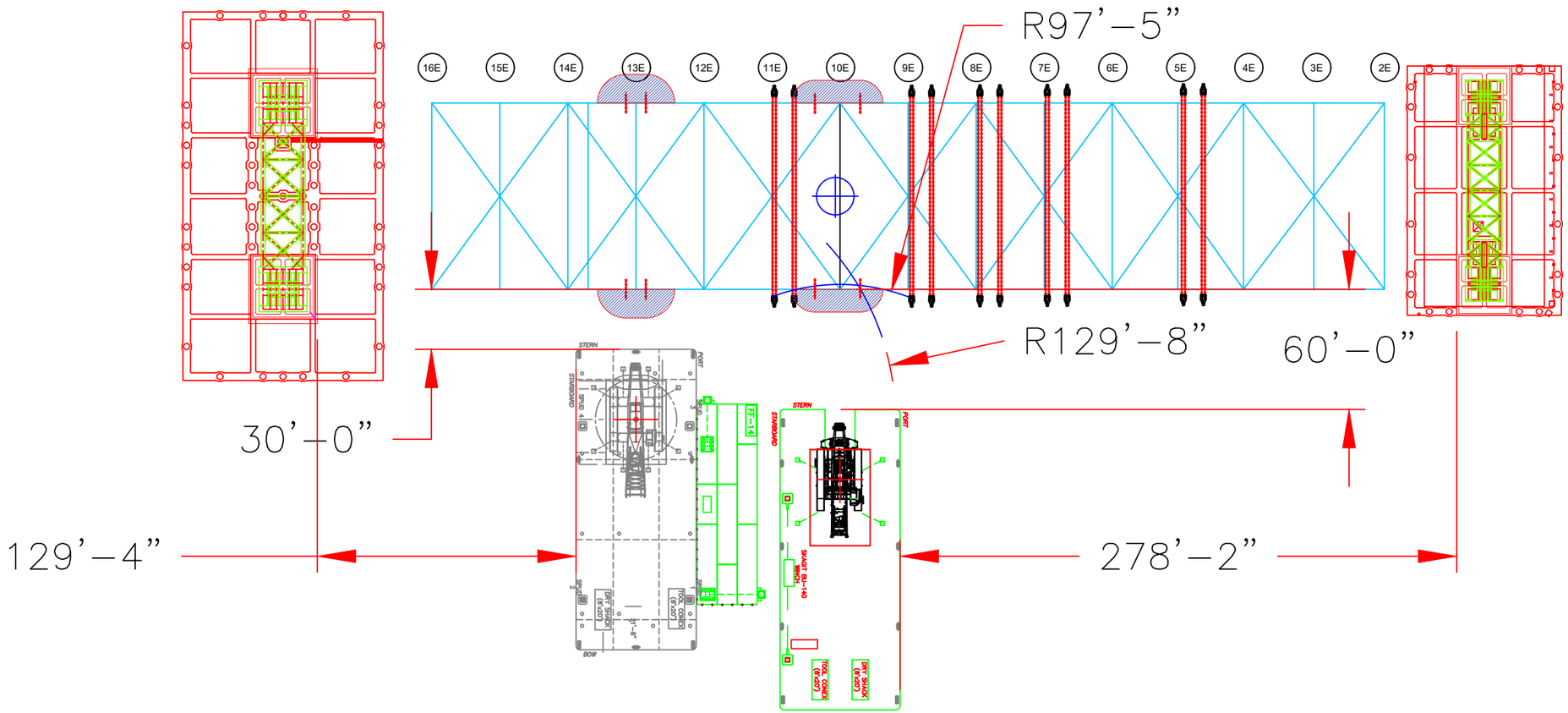

CLAM BARGE
TO CENTER ON
KNUCKLE 10

*FF14 (DIVE BARGE) IS TO
REMAIN IN POSITION FROM
LAST STEP

RESOLVE
MARINE GROUP Inc
1510 SE 17TH STREET • FT LAUD. FL. 33316
TEL: (954) 764-8700 • FAX: (954) 764-8724
WWW.RESOLVEMARINE.COM

DRAWN: TMR	RMG TAPPAN ZEE	APPRVD: —
DATE: 01/19/19		DATE: —

TRENCH VESSEL LAYOUT
AREA 10S

SCALE:	SHEET:	REV.	DRAWING NUMBER:
NONE	7 OF 7	A	#