NYSDEC Demolition Plan
for the
Tappan Zee Hudson River Crossing

Rev 7
November 16, 2018

Prepared by
Tappan Zee Constructors, LLC
555 White Plains Road, Suite 400
Tarrytown, NY 10591

Document History			
Issue Date	**Description**	**By**	**Revision**
6/30/2016	DEC Demolition Plan for Agency Permit Review/Approval	BP	0
10/20/2016	DEC Demolition Plan for Agency Permit Review/Approval	EB	1
1/12/2017	DEC Demolition Plan for Agency Permit Review/Approval	EB	2
6/15/2017	Revised per DEC comments	EB	3
2/12/2018	Revised per DEC comments	EB	4
4/4/2018	Revised for Area 2 Demolition Methods & DEC Comments	EB	5
5/16/2018	Revised per DEC comments	JC	6
11/16/2018	East Anchor Span Salvage Operation	ERB	7

Table of Contents

Tables

Attachments

1.0 INTRODUCTION

Tappan Zee Constructions, LLC (TZC) has prepared this Demolition Plan (Plan) Rev 7 to provide the general approach and means and methods that will be utilized to demolish the existing Tappan Zee Bridge. This Plan has been prepared specifically to meet the Tappan Zee Hudson River Crossing Project (Project) demolition requirements and environmental performance commitments (EPCs) provided in the Project DB Contract Documents (Contract No. D214134) Part 3 Project Requirements, Section 3 Environmental Compliance and Section 25 Demolition as Conformed November 2012.

1.1 Limits of Demolition

Demolition requirements are included in the Project's Final Environmental Impact Statement (FEIS), July 2012 and Record of Decision (ROD), September 2012 and Project permits, including:

- NYSDEC Permit ID 3-9903-00043/00012-14 modified July 2014;
- NFMS Endangered Species Act Section 7 Consultation Biological Opinion (BO) NER-2017-14375 dated November 1, 2017;
- United States Coast Guard (USCG) Permit dated April 2013;
- United States Army Corps of Engineers (USACE) Permit Number NAN-2012-00090-M10; and
- NMFS Essential Fish Habitat (EFH) Assessment Conservation Recommendations (CR) dated June 2012, Appendix F of the FEIS.

As required by the FEIS and Project permits, all parts of the existing Tappan Zee Bridge across the Hudson River not utilized in the new bridge shall be removed to a minimum of two feet (2') below the river bottom, including:

- Removal of timber piles 2' below river bottom;
- Removal of caisson-supported piers 2' below river bottom; and
- Removal of fenders 2' below river bottom.

1.2 Limit of Demolition for Bents 190 and 191

Bents 190 and 191 of the existing Bridge were constructed to the immediate west and east of the Metro North Railroad (MNR) Right of Way (ROW), respectively. These bents are in close proximity to the MNR track foundations and nearby slopes. Removal of the structures to 2' below the river bottom may result in destabilization of the tracks or slopes in the ROW.

TZC is proposing to keep the existing Tappan Zee Bridge Bents 191 and 190 to remain at or above grade and top of caisson, respectively. Please see Attachment A for drawings of the proposed removal and remaining elevations of these existing bridge bents. As described below, allowing these bridge structures to remain will reduce in-water and landward excavation and demolition activities adjacent to the MNR commuter railroad, thereby reducing potential impacts to railroad operations and near-shore areas without adversely impacting other resources.

1.2.1 Existing Pier Locations and Conditions

Existing Bent 191 is located immediately east of the MNR ROW in Westchester County. This landside bent consists of two (one north and one south) concrete spread footings founded on rock approximately [redacted] below existing grade. Each footing is approximately [redacted] (L x W x H) and each supports a single [redacted] concrete pier column (one north and one south). The southernmost corner of the south footing is approximately 23 feet east of the MNR Track 3 and is visible above the existing grade (Attachment B: Figures #1 and #2). The northernmost corner of the south footing is not visible and is approximately 10 feet below the existing steeply sloping grade. Removing the concrete columns and footings of existing bridge Bent 191 below the existing ground line would require excavation and demolition, most likely via hydraulic hammer (e.g., hoe ram) or similar impact equipment, below grade and within very close proximity to the MNR tracks.

Existing Bent 190 is located immediately west of the MNR ROW in Westchester County. This waterside bent consists of two (one north and one south) circular, steel sheet pile encased concrete caissons founded on rock approximately [redacted] below the riverbed. Each caisson is approximately [redacted] feet in diameter and each supports a single concrete pier column (one north and one south). The north caisson is surrounded by a square-shaped sheet pile cofferdam. The top of the sheet pile is just visible above the existing shoreline (Attachment B: Figures 2, 3, and 4). The eastern edge of the circular caisson and sheet pile cofferdam is approximately 20 feet from MNR Track 4. The circular caisson is not visible and is buried approximately 1-8 feet below the existing sloping shoreline. Demolition and removal of the north pier caisson would require excavation of the existing shoreline to within approximately 5 feet of MNR Track 4 or require significant support of excavation (e.g., temporary sheeting) be installed between the MNR tracks and the existing caisson.

The south caisson is located approximately 18 feet from the existing shoreline and 9 feet from Pier 42 Eastbound in water depths of 2-4 feet below mean low water (MLW). The top of the south caisson is approximately 1-foot below mean high water (MHW) and remains partially submerged at MHW (Attachment B: Figures 5 and 6). Removing the caisson two feet below the bottom of the existing waterway would require demolition of the concrete caisson, most likely via hydraulic hammer (e.g., hoe ram) or similar impact equipment, and temporary disturbance of the river bottom immediately surrounding the caisson to remove the outer steel sheet pile via cutting or hydraulic shears. The Project FEIS determined sediments within the vicinity of Bent 190 demonstrated elevated levels of metals. The proposed limits of demolition for Bent 190 would minimize disturbance of these sediments within the Hudson River.

1.2.2 Proposed Pier Demolition

<u>Bent 191</u> – TZC proposes to remove the existing north and south bent columns to grade via concrete wire saw, hammer or shears and leave the footings in place, thereby avoiding additional excavation and demolition below grade and in close proximity to the MNR tracks. See Attachment A for proposed conditions following pier column demolition.

<u>Bent 190</u> – TZC proposes to remove the existing north bent column to approximately elevation 4.00 to allow for signage and marking for navigation, thereby avoiding additional excavation and demolition below grade and in close proximity to the MNR tracks. See Attachment A for proposed conditions following

column removal. Concrete wire saw or shears would be used to remove the concrete column. Similarly, TZC proposes to remove the south bent column to elevation 4.00. The existing caisson and footing would remain in place, thereby avoiding in-water demolition in this near-shore area. Concrete wire saw or shears would be used to remove the concrete column.

As described above, Bent 190 is in close proximity to the MNR track structure and nearby slopes. Given the proximity of the north caisson of Bent 190 from the edge of Track 4 of MNR, removal of the structures to 2' below river bottom will impose an unstable slope (1:1) extended from the limits of removal to the edge of the existing railroad track. According to existing boring logs, the top strata consist of very soft organic material with identified weight of rod properties. This material carries minimal to no shear strength and the required excavation can cause major disturbance in the natural state of the existing slope.

1.2.3 Assessment of Benefits and Potential Adverse Effects

Existing Bents 191 and 190 are located within NYSTA property and lands underwater, and their respective footings are located under the new bridge structure, near new bridge Piers 42 and 43. Due to their nature (i.e., existing footings mostly buried below existing grades), location and access restrictions, transportation and ecological resources were evaluated to identify the benefits and potential adverse effects of the proposed modification.

Transportation resources near Bents 191 and 190 are the Hudson River and MNR. MNR passes immediately adjacent to both bents, within the existing MNR ROW. Bent 191 is located landward and outside of the MNR ROW; therefore, leaving the pier footings in place at this location would have no effect on future navigation of the Hudson River or MNR operations. Similarly, Bent 190 is located outside of the MNR ROW; therefore, leaving the pier footing in place at this location would have no effect on MNR operations.

The north and south foundation at Bent 190 is located along the existing Hudson River shoreline well outside of the navigation channel or waterway used for navigation. The south caisson footing is located approximately 18 feet from the existing shoreline in shallow water that is well outside of the navigation channel and is not used for navigation purposes. TZC proposes to clearly mark the remaining footing using signage or similar to minimize any hazard to navigation. Given the close proximity of the existing foundations to the new bridge pier foundations, navigation through the area would be subject to security and other restrictions; therefore leaving the Bent 190 foundation in place would not adversely impact navigation or transportation resources of the Hudson River.

There are no ecological resources identified near existing Bent 191, which is located immediately east of the MNR in a maintained and unvegetated ROW. Ecological resources near Bent 190 are the aquatic resources, including threatened and endangered species, and habitat of the Hudson River. Near Bent 190 the aquatic habitat is predominately intertidal and subtidal habitats of varying depths, ranging from shallow intertidal shorelines to shallow subtidal shoals. The benthic habitat is unvegetated consisting of coarse sandy to fine silty sediments.

NMFS identified this region of the Hudson as EFH for 16 federally managed species; and identified two federally endangered fish species that occur in this region of the Hudson River, the shortnose sturgeon (*Acipenser brevirostrum*) and the Atlantic sturgeon (*Acipenser oxyrinchus*). NMFS identified several EFH

Conservation Recommendations to avoid, minimize and mitigate for Project impacts pursuant to Section 305(b)(4)(A) of the Magnuson-Stevens Fishery Conservation and Management Act (MSA), and provided several Conservation Recommendations pursuant to Section 7(a)(1) of the Endangered Species Act (ESA), as well as reasonable and prudent measures (RPMs) to minimize and monitor impacts of incidental take of listed shortnose and Atlantic sturgeon.

Prior environmental assessments, including the FEIS and ROD, recognized the benefit of removing the existing waterside bridge piers to offset the footprint of the new bridge pier foundations. At existing Bent 190, the south bent foundation occupies approximately [redacted] of open water benthic habitat; the north bent foundation and rectangular cofferdam occupies approximately [redacted] of intertidal and open water benthic habitat. The total in-water footprint of the new bridge is approximately [redacted] acres (NYSTA December 17, 2012 Supplement to the March 26, 2012 Joint Permit Application), well below the alternative replacement bridge footprints assessed in the FEIS and ROD (6.5 and 8 acres for the Long Span and Short Span Options, respectively), resulting in a net gain of open water benthic habitat of 2.4 acres following demolition of the existing bridge. Leaving the Bent 190 foundations in place would diminish this net gain by less than 2% while decreasing the disturbance of impacted sediments in the area.

Given the relatively small size of the Bent 190 foundation footprint as compared to the available soft-sediment benthic habitat in the Tappan Zee region (RMs 24-33), leaving the foundations in place would result in an extremely small loss of soft-bottom benthic or foraging habitat for sturgeon. Sturgeon are only likely to be present in the shallow waters along the shoreline if suitable forage is present. Therefore effects to sturgeon are likely to be limited, insignificant and discountable.

FEIS EPCs, NMFS conservation recommendations, and environmental permits, including the NYSDEC Permit 3-9903-0043 and USACE Permit NAN-2012-00090, recognized the benefit of minimizing the disturbance of bottom sediment to minimize potential impacts to aquatic resources. Leaving the Bent 190 column foundations in place would avoid disturbing the Hudson River bottom in the near shoreline intertidal and subtidal habitat.

2.0 EXISTING STRUCTURE

2.1 Area Map General

Beginning in Rockland and working east, the existing structure has been divided into six (6) distinct Demolition Areas (see Attachment C) based on structure type, location and interaction with the completion of the permanent structure. Areas 1 and 6 are unique due to the coordination necessary to complete the new structure and because they each have a land and marine portion. The Demolition Areas are as follows:

- Area 1 A/B: Rockland Tie-in
- Area 2: Rockland Approach
- Area 3: Rockland Truss
- Area 4: Main Span
- Area 5: Westchester Truss
- Area 6 A/B: Westchester Tie-in

Attachment D provides bridge structure definitions for each of the Demolition Areas.

2.2 Area 1: Rockland Tie-in

The Rockland Tie-in Area is comprised of the on land existing structure terminating at the Rockland Abutment. This is designated at Area 1A, and includes Span 1 over River Road. The marine portion, Area 1B, transitions at Bent 3 and continues thru Pier 30. It shares a partial footprint with the permanent approach spans (Unit 1EB and 2EB). Furthermore, this section of existing structure is bordered to the north by the new bridge and shallow water to the south.

2.3 Area 2: Rockland Approach

The Rockland Approach (Piers 31 through 165) consists of the long causeway between the Rockland Tie-in and Rockland Truss sections. This is the largest section by linear footage, and consists of existing structure similar to that described in Area 1. Areas 1 and 2 have been divided due to the construction coordination necessary to perform permanent new bridge work in Area 1. Due to this delineation, work in Area 2 can commence at the beginning of the demolition work window. Area 2 is confined to the north by the new structure with decreasing access from Bents 50 to 30.

2.4 Area 3: Rockland Truss

Working east from Rockland County, the first underdeck spans begin in the Rockland Truss section. Transitioning from the [redacted] causeway spans, Area 3 begins at Bent 166 and ends at Bent 172. The spans in this section are typical [redacted] and consist of a steel truss supporting the precast concrete panel road surface. The concrete substructure found in Area 3 can also be considered typical at each bent. An upper, solid concrete strut connecting two (2) hollow concrete columns can be found at each location. The top elevation of each bent will vary slightly, and will contribute to the total volume of column concrete. Both circular and rectangular caissons are found in this area.

2.5 Area 4: Main Span

The Main Span (Piers 173, 175, 176, and 178) is a unique structure over the navigable channel. This area is dominated by the steel superstructure cantilever through truss, which is divided into Anchor, Cantilever and Suspended spans. The superstructure supports the precast concrete panel wearing surface, which is a similar design found in Areas 1 – 3. The substructure in this section is unique to this area. Each bent in this area is steel lattice members making up the columns and top strut. The top elevation of each bent varies slightly, and the structure can be considered symmetrical about the centerline of span. The foundations in Area 4 are similar to the rectangular caissons found in Area 3. Specifically, the foundations at Bents 175 and 176 are significantly larger than the anchor bents.

2.6 Area 5: East Deck Truss

Area 5 (Piers 179 through 184) shares many structural details with Area 3. Both sections consist of steel underdeck trusses, supported on concrete struts and columns. Similarly, the bents in the Area consist of circular caissons. Due to the horizontal curve of this Area, the span lengths vary. This determines the

specific length of the underdeck section. The Exodermic Deck specifics in this Area are similar to those found in Area 6, and substantially different to the deck details in Areas 1 – 4.

2.7 Area 6: Westchester Tie-in

Area 6 (Piers 185 through 191) represents the tie-in portion to the Westchester Landing. Similar to Area 1, this section is both divided into water (6A) and land portions (6B), as well as coordinated with the final work (Unit 9EB) of the permanent new bridge. Area 6A is structurally identical to Area 5, sharing features for deck, superstructure truss, concrete substructure and foundations.

3.0 SCHEDULE AND SEQUENCING OF WORK

3.1 Sequence General and Milestones

Provided in Attachment E is an overview of the major work areas and anticipated schedule for demolition activities. The schedule information provided is based upon the most up to date Project schedule. Demolition operations began in August 2017. Deck removal operations in Areas 2, 4, and 6 began in October 2017 after all traffic was shifted to the new structure. As each section is completed, the associated substructure work will commence. The foundation work will be the last work performed in each Area.

4.0 REGULATORY REQUIREMENTS

As further described below, demolition of the existing bridge will be conducted in accordance with the Project's requirements in the FEIS, ROD and Project permits (Refer to Section 1.1 for a list of applicable permits). Specifically, means and methods proposed demonstrate conformity with the NYSDEC Permit ID 3-9903-00043/00012-14 Conditions 45-51, 54-55, 57, and 59 as further described below.

Condition 46: Bridge demolition must be conducted in a manner that minimizes the resuspension of sediment.

> TZC has planned for demolition to be performed in a manner consistent with the means and methods described in the FEIS. During substructure and superstructure removal, the proposed demolition takes advantage of the large equipment available to TZC, allowing large pieces of the structure to be cut and removed to the extent possible, rather than demolishing the structures in-place. During foundation removal, full depth turbidity curtains will be employed in Areas 1 and 6 to minimize sediment resuspension. In addition, the rectangular caisson removal will start from the inside out, allowing concrete material to stay within to the interior of the structure during the onset of removal. Every effort will be made to ensure that demolition debris is confined to the location of foundation removal during demolition and removal. Where applicable, side scan sonar will be used to identify all material to be removed from the River during demolition. Once identified, this material will be recovered.
>
> For more information about Best Management Practices (BMPs) to be employed during Mechanical Foundation Demolition, please refer to Attachment J of this plan.

In order to minimize sediment resuspension during the removal of the East Anchor Span, TZC has prepared a salvage operation plan utilizing a system of chains to be placed on the river bottom (refer to Section 6.5.1) to aid in the removal of the span from the river bottom. These chains will allow the anchor span structure to be recovered in a shorter duration and with less bottom disturbance than if the fallen span is disassembled in place on the river bottom.

Each chain assembly will be 360 feet long and 0.9ft ($10^{13/16}$") wide, and including the central 100 foot section of double chain, will occupy 0.01 acres of benthic habitat when resting on the bottom. Due to the shifts of the chain during deployment and recovery, an additional 3 foot wide area will be disturbed along the length of each chain. This would result in 0.30 acres of benthic habitat disturbance. If used, the pulling chain assemblies would result in 0.1 acres of benthic disturbance. The maximum area of disturbance associated with all chain assemblies is approximately 0.4 acres. The substrate in the area of impact is dominated by sandy mud based on sediment data acquired from the New York State GIS Clearing house.

The placement and retrieval of the chains and the East Anchor Span structure will result in surficial disturbance to the soft sediments and will not degrade its future quality as habitat. The surficial disturbances to the soft substrates will quickly recover as a result of natural fluvial processes. During the time the chains are in place on the river bottom a small percentage of the total area of benthic habitat will not be available. The chain systems are laid out on barges and are visually inspected regularly for the presence of invasive species and will continue to be inspected prior to deployment. TZC will conduct water quality monitoring, as required by the NYSDEC approved Water Quality Monitoring Plan.

Condition 47: All debris and materials from the demolition of the existing Tappan Zee Bridge must be removed from the bed and banks of the Hudson River.

TZC will perform a pre-demolition bathymetric survey from the Westchester shore to the Rockland shore and between 700 feet north and south of existing bridge centerline to establish pre-demolition baseline conditions. Periodic side scan sonar surveys will be conducted to identify debris that may have entered the River with the potential to affect navigation.

A post-demolition bathymetric survey will be conducted and compared to the pre-demolition bathymetric survey to verify no debris is present. As depicted in Attachment F, a barge mounted excavator or crane with clam bucket attachment, material grapple or bucket will be used to remove the demolition debris. Demolition debris will be bucketed to adjacent debris barges for off-site disposal.

An additional bathymetric survey will be conducted in areas that have received debris recovery after the post-demolition bathymetric survey to verify all debris capable of being identified by the bathymetric survey has been removed from the river bed.

The proposed demolition means and methods have the potential to produce debris from hoe ramming, shearing, wire sawing and drilling. Debris size will vary and is described below:

- Hoe ramming operations may generate debris ranging from dust/granular aggregates to pieces equal or larger than the smallest dimension of the structure being demolished. For example, a two foot by two foot column may generate debris two foot in diameter. Solid circular caisson may generate large debris pieces that could be over 6 feet in diameter.

- Shearing operations may generate debris ranging from dust/granular aggregates to pieces equal or less than the smallest dimension of the structure being demolished. For example, a two foot by two foot column may generate debris up two foot in diameter.

- Wire sawing operations will generate fines and may generate spalls around the size of a fist.

- Drilling operations will generate dust/granular aggregates.

Demolition debris will be removed from the river bottom prior to the completion of demolition activities.

TZC has prepared a Pollution Abatement & Containment Removal Plan (see Attachment N). Piers 176 and 178 contain equipment previously used during demolition activities. Refer to Attachment M for the location and inventory of the equipment. Due to safety constraints, this equipment cannot be removed or secured. The equipment is expected to fall within a relatively small area. A salvage team will collect all equipment, debris and structure from the river, floating or submerged, with cranes and/or divers as required by Condition 47. All recovered equipment will be logged against the existing equipment inventory.

As part of the Pollution Abatement & Containment Removal Plan, TZC's emergency response team has prepared an inventory of necessary material to immediately mobilize in the event the span falls. TZC will implement the above plan to contain and clean up the releases that may occur when the equipment enters the River.

The following steps will be taken to control and contain the potential releases from the equipment:

- TZC to contact emergency response team.
- Response team to arrive on site within the hour.
- Response team to assess source locations of release(s).
- Response team will deploy and contain the release with absorbent boom.
- Response team will collect and properly dispose of absorbent boom.
- Response team will pursue and collect any floating debris, such as equipment and tools, and place on barges with appropriate containment.
- Response team will remain on site and support salvage team until equipment sources have been recovered or release has arrested.

Salvage team will collect all equipment, debris and structure from the river, floating or submerged, with cranes and/or divers as required by Condition 47. All recovered equipment will be logged against the existing equipment inventory.

Condition 48: Piles, caissons, abutments, fenders and other in-water components of the existing Tappan Zee Bridge must be removed to two feet below the mud line. Silt curtains must be deployed during this operation.

In-water components will be removed to the NYSDEC required demolition limits, provided in Attachment K. Full depth turbidity curtains will be used in Areas 1 and 6 during foundation removal (refer to Attachment G). Turbidity curtains, 5-feet deep and anchored to the river bottom, will be employed in Areas 2, 3, 4, and 5 to contain debris and reduce turbidity.

In order to access the foundations to the NYSDEC required demolition limit, sediment would be displaced around the foundations. The proposed displacement would result in a trench of approximately two-feet deep and three-feet wide surrounding the pier. Sediment would be displaced from the area surrounding the pier to the edge of the disturbed area in a small mound. This sediment is anticipated to cover approximately three-feet of previously uncovered benthic habitat surrounding the pier. The total surface area of the benthic area disturbed and the volume of sediment displaced are summarized in Table 1 for the Demolition Areas.

Table 1 – Surface Area and Volume of Disturbed Sediments

Demolition Area	Surface Area	Volume
	Acre	(CY)
3 – Rockland Truss: Bents 166 – 172	1.2	880
4 – Main Span: Bents 173 – 178	1.0	800
5 – Westchester Truss: Bents 179 – 186	1.0	700
6 – Westchester Tie-in: Bents 187 – 190	0.4	400
Total	**3.6**	**2,780**

Displacement of benthic sediments, as described above, is necessary to achieve removal of the TZB in accordance with the contract and Project permits. The foundation types, including the circular caissons and the floating caissons require external access in order to perform the necessary work. For example, the metal sheet piles wrapping the circular caissons would be cut using a shear or diver which would be accessed from outside of the footprint of the pier. Sediment displacement would allow access to these components of the existing bridge to the NYSDEC required demolition limit with minimal sediment disturbance.

In order to minimize sediment resuspension, an open excavator bucket would be utilized to pull back sediment around the foundations rather than lifting sediment up into the water column. This method could result in isolated resuspension of benthic sediments. Hand jetting may be used to expose steel sheet and pipe pile to facilitate cutting by divers. The hand jetting method will use either pressurized air or water in order to displace the sediment to reach the necessary elevations.

Extensive water quality monitoring during the Project has demonstrated that resuspension of bottom sediments associated with activities such as dredging and pile driving infrequently resulted in exceedances of the Project's NYSDEC Permit conditions. Furthermore, any observed exceedances were also typically temporary in nature.

Condition 49: A floating containment booms and/or silt curtains must be deployed around all active substructure demolition areas to control and contain debris and discharges to meet water quality standards.

TZC will utilize means and methods that will minimize the likelihood of debris entering the River. Specifically, TZC intends to remove substructure in large modular components minimizing potential for generation of small pieces of debris at risk of falling into the River. Visual observations of activities will be conducted by a barge-based or vessel-based observer during demolition activities as required per the Water Quality Monitoring Plan. If turbidity is observed that extends beyond the 500-ft mixing zone, corrective actions will be implemented to comply with water quality standards.

Condition 50: A debris containment net must be deployed and maintained at all times during demolition of the bridge deck and superstructure.

TZC will remove the existing Tappan Zee Bridge deck and superstructure in modular components, minimizing risk of debris generation during superstructure removal operations. TZC will utilize access systems during the superstructure removal stage to provide access for workers to separate deck panels, stringer beams and diaphragms from the supporting bridge structure. These access systems serve dual purpose by providing debris containment for anchor bolt, stringer beam and diaphragm separation for deck removal operations. Deck preparation in Areas 2, 3, 5 and 6 will occur while over debris containment. Deck rigging and removal in Areas 2, 3, 5, and 6 may occur without debris containment. Area 4 deck preparation and deck removal will occur over debris containment. These areas are further described below. Containment measures are detailed in Attachment H.

<u>Rockland Causeway (Areas 1 and 2):</u>

Superstructure consists of a composite deck/superstructure element made up of deck panels precast integrally over bridge beams. Panels/beams sit directly on top of the bridge column/caps and will be removed in modular pieces by crane in the following steps:

- Separate panels with top side deck saws. Vacuums will be used to control water generated during the operation.
- Deck Preparation - Drill out lifting holes/attach lifting lugs at corner points of panel. Cut bolt connecting panel to pier cap.
- Rig and lift panel off pier, set onto barge.

<u>Truss Spans (Areas 3, 5, and 6):</u>

Superstructure consists of simple span truss elements with precast deck panels secured on top framing of truss. Deck removal will be similar to the Rockland Causeway described above, removing enough deck to rig and lift the entire truss span [redacted] in the following steps:

- Separate panels with top side deck saws. Vacuums will be used to control water generated during the operation.
- Deck Preparation - Drill out lifting holes/attach lifting lugs at corner points of panel. Cut bolt connecting panel to truss.
- Rig and lift panel off truss, set onto barge.
- Install lifting lug on truss at four points.
- Rig truss with Barge Mounted Derrick Crane.
- Lift truss off piers, set onto barge.

Main Span (Area 4)

Superstructure consists of a suspended, cantilever and anchor truss elements with precast deck panels secured on floor beam framing of truss. Deck removal will be similar to the Rockland Causeway described above, removing deck prior to truss removal.

- Separate panels with top side deck saws. Vacuums will be used to control water generated during the operation.
- Deck Preparation - Drill out lifting holes/attach lifting lugs at corner points of panel. Cut bolt connecting panel to truss.
- Rig and lift panel off truss, set onto barge.
- Install falsework, access, and strand jacking equipment
- Lower with strand jacks to barges. Truss removal and lowering is not anticipated to produce debris as it is a large modular component. In the event debris were to be produced, the truss sections are lowered onto barges, which would provide debris containment.

Rigging and lifting of deck panels from the above described structures to barges is not anticipated to produce debris. In the event debris is generated during the lifting operation, the method will be reevaluated and updated to address the conditions of the operation.

Condition 51: Blasting for bridge demolition is prohibited.

Blasting is not being proposed for demolition of the existing Tappan Zee Bridge.

Condition 54: Within 60 days of completion of bridge demolition, a hydrographic survey of the river bottom beneath the footprint of the demolished bridge must be submitted to the Department. For comparison purposes a pre-demolition survey must be provided with the post-construction survey.

TZC will conduct a pre- and post-bathymetric survey of the riverbed from Westchester shore to Rockland shore and between 700 feet north and south of the existing bridge centerline within 60 days of completion of Bridge demolition. The bathymetric survey will be conducted on a 10ft grid and referenced to the North American Vertical Datum (NAVD88).

Condition 55: The Permittee must minimize disturbance to Peregrine Falcons during all phases of the bridge replacement project. All activities must maintain the maximum distance from the peregrine falcon nest on the existing bridge as practical. No less than 30 days before starting the Authorize Activity the Permittee must submit a plan for protection of the falcon nest to the department

A Peregrine Falcon Protection Plan has been prepared for the Project which describes demolition activities. TZC will schedule coordination meetings with the NYSDEC two (2) months prior to demolition on the existing Main Span to discuss issues related to the falcon nest. TZC will provide necessary cooperation and access to the NYSDEC to facilitate the evaluation of the peregrine falcons nesting activity during each year of demolition to determine if a pair is active on the territory, are nesting and the success of that nest.

Condition 57: The Permittee must evaluate Peregrine Falcon nesting activity during each year of construction and demolition to determine if a pair is active on the territory, are nesting, and the success of that nest. Any reports of impacts to the nest should be reported to the wildlife manager at the NYSDEC Region 3 Headquarters in New Paltz, NY.

A Peregrine Falcon Protection Plan has been prepared for the Project which describes demolition activities. TZC will provide necessary cooperation and access to the NYSDEC to facilitate the evaluation of the peregrine falcons nesting activity during each year of demolition to determine if a pair is active on the territory, are nesting and the success of that nest. Any reports of impact to the nest will be reported according to the approved Plan.

Condition 59: At least 45 days before starting dredging activities; decanting activities; removal of large debris fields; pile driving in zone C; channel armoring; cofferdam construction; removal of the existing bridge; or any other activity that may cause resuspension of the bottom sediments, Permittee must submit a water quality monitoring plan to the department. If activities occur concurrently in multiple locations, each activity that may cause resuspension of bottom sediments must be monitored separately. The Plan must be in effect at all times during these activities. The above activities may start when the Department has given written approval of the plan.

Water Quality Monitoring Plan (WQMP) Rev10 was submitted to and approved by the NYSDEC in May 2018. As required, the WQMP will be updated to reflect conditions that may change as demolition progresses.

5.0 REMOVAL OF DECK SUPERSTRUCTURE

5.1 Superstructure Deck General

The existing deck consists of three (3) structural types; Precast, Exodermic and Cast in Place. The Precast deck variety accounts for the majority of the existing span and can be found in Areas 1 – 4. Areas 5 and 6A, to include Span 191, represent the locations of the Exodermic Deck. Finally, the Area 6B Tie-in on land is constructed with a Cast in Place deck system. Each type will be removed similarly, saw cut from the supporting structure and lofted free. The unique details, and necessary steps to free the deck, will be

described in this section. As these activities will require the cutting and removal of steel members, adherence to the OSHA Lead Exposure requirements for personnel protection and monitoring, OSHA 1926.62(d)(2)(iv), will be necessary. In addition to the wearing surface itself, this section outlines the necessary components to be removed prior to the deck activities. Contractual requirements for NYSTA Salvageable components will dictate individual bridge components to be removed and stored at NYSTA locations. Once panel sections are free from the structure, they will be landed on trailers or barges for processing.

5.2 Deck Miscellaneous Sections

In addition to the deck itself, there exists miscellaneous items that will be disconnected and removed from the structure. As mentioned above, contractual requirements for NYSTA Salvageable components will dictate individual bridge components to be removed and stored at NYSTA locations. Utilities will be decommissioned prior to the start of all demolition activities. Outside of the bridge demolition footprint the utility source will be de-energized, locked and tagged per approved Project plans. This will allow the safe demolition and removal of all light poles, sign structures, conduit and bridge lighting. Bridge barriers will also be removed at this time. Side and mobile barriers can be removed prior to saw cutting panel joints. Barrier sections will be rigged and disconnected from the concrete deck. These sections will be loaded on trailers and later, transferred to barges.

5.3 Precast Panels

Precast panels are found in Areas 1 – 4. The panels in Areas 1 and 2 are [redacted] in length and [redacted] in weight. Panels in Area 3 are approximately [redacted] in length and [redacted] in weight. The precast panel stringers are connected to the main floor beam truss members, in addition to the panel to panel diaphragm channel connections. At approximately [redacted], the Area 4 Main Span panels are longer and heavier than the Area 3 panels. These panels average [redacted] and are supported at each end at the floor beam members. The bolted seat connection and the diaphragm connections require under deck access to facilitate full panel removal.

5.3.1 Demo sequence Areas 2 and 3

The typical sequence of work is outlined in the steps below:

1. Working underneath the deck, torch cut the diaphragms connecting the individual panels and the anchor bolts tying the panels to the substructure.
2. Separate the panels along the transverse and parallel joints with concrete deck saws. Open lifting holes with drills.
3. Rig and loft panels onto deck barges for off-site disposal.

5.3.2 Demo Sequence Area 4

The typical sequence of work is outlined in the steps below:

1. Assemble and install underdeck debris and access shielding.

2. Access the precast panels from the underdeck shielding and torch cut diaphragms and anchor bolts from main floor beams.
3. Separate the panels along the transverse and parallel joints with concrete deck saws. Open lifting holes with drills.
4. Rig and loft panels onto deck barges for off-site disposal.

5.4 Exodermic Panels

The Exodermic Deck sections in Areas 5 and 6 have a variable width depending on lane location. Between Bents 178 and 190, the typical Exodermic Deck Panels are [redacted] in length, with main bearing bars running the width (transverse to traffic) and distribution bars fabricated perpendicular. The steel grid is topped (precast) with concrete and paved with a [redacted]-inch asphalt wearing surface.

5.4.1 Demo Sequence Areas 5 and 6

The typical sequence of work is outlined in the steps below:

1. Saw cut exodermic deck into panels.
2. Install lifting lugs to the panels utilizing drop in anchors.
3. Rig and loft panels onto deck barges for off-site disposal.

6.0 REMOVAL OF STEEL SUPERSTRUCTURE

6.1 Superstructure Steel General

Existing steel superstructure includes the Main Span Truss and the Approach Underdeck Trusses in Areas 3 through 6. The removal of steel structural members will require adherence to the OSHA Lead Exposure requirements for personnel protection and monitoring, OSHA 1926.62(d)(2)(iv). The dismantling will be performed by removing large sections of existing truss, lowering to barges for off-site disposal. This will be utilized for all twenty (20) underdeck trusses, as well as the two (2) approach and one (1) suspended Main Spans. Only the cantilevered portions of the Main Span will be removed incrementally.

6.2 Underdeck Truss Removal Sequence

The typical sequence of work is outlined in the steps below:

1. Install lifting lugs at lifting points.
2. Position Left Coast Lifter (LCL) at confirmed radius of pick.
3. Lift truss and place on barge for off-site disposal.

6.3 Main Span – Suspended Span Removal Sequence

The typical sequence of work is outlined in the steps below:

1. Modify existing members and install falsework systems and access.

2. Install Strand Jacking system.
3. Close channel for a period estimated at 48 hours to allow lowering of the Suspended span, tie-down (lashing and securing) to the transport barges and towing away from the main channel. This channel closure will be coordinated with the USCG and other Regulatory agencies, as appropriate.
4. Lower span to barge and secure for dismantling and disposal.

6.4 Main Span – Cantilever Span Removal Sequence

The typical sequence of work is outlined in the steps below:

1. Modify existing members, install falsework systems and access, and finally cut and loft members.
2. Prepare rigging locations for each pick. Take the load with the crane prior to performing the final torch cuts.
3. Cut the section free, swing and land the section on the adjacent material barge.
4. Coordinate stages that will impact or alter the navigable channel with the USCG and other Regulatory agencies, as appropriate.

6.5 Main Span – Anchor Spans Removal Sequence

The typical sequence of work is outlined in the steps below:

1. Modify existing members and install falsework systems and access.
2. Install Strand Jacking system.
3. Lower span and secure to barges for dismantling and disposal.

6.5.1 East Anchor Span Salvage Operation

On September 7, 2018 the East Anchor Span became compromised. The span is currently stable, but key members are highly stressed and there is currently a risk of a collapse. In the event of a collapse the structure is expected to fall within the established safety zone which could impact the area adjacent to the navigation channel. There is also a remote possibility that certain members could strike the pile cap and lower tower leg of the new Governor Mario Cuomo Bridge. In the event of a collapse, a salvage effort will be undertaken to remove the structure from the river bottom, dismantle it and prepare for proper disposal.

A system of large chains and two parallel chain pulling barges will be employed to recover the structure from the river bottom. Ten 360 foot lengths of heavy chain will be laid across the river bed beneath the anchor span. The central 100 feet of these chains will consist of a double section of chain that is connected to the exterior lengths by steel plate rigging. These chain systems will be connected to two 300’ x 100’ specialized chain pulling barges located on both sides of and parallel to the span (Refer to Attachment A for detailed depictions). When tensioned these chains will form a sling beneath the structure so it can be lifted off the river bottom when the chain pullers on each barge are engaged.

This approach allows the majority of the structure to be promptly recovered in one large piece and will allow for disassembly to occur at the surface. The chains will be preplaced and the ends of the chains will be secured to marker buoys allowing for retrieval from the river bottom and connection to the chain pulling barges.

Since the time the East Anchor Span initially became compromised, TZC has been evaluating alternatives for the controlled demolition of the East Anchor Span. A number of alternatives will require the pulling of the anchor span. Therefore, TZC is placing pulling chains, in addition to the lifting chains, in the river in anticipation of an alternative demolition mean and method being utilized. The system of pulling chains (two 720 foot length chains) will be used to direct the fall of the structure eastward and away from the navigation channel. These pulling chains assemblies will feed into a chain puller mounted to an anchored barge.

The pulling chains will be removed by crane from the river after demolition of the bridge, if utilized. The lifting chains will be removed from the river once the span is lifted from the river bottom, which is an estimated 2 weeks. The chains will be placed on barges and removed from the Project site.

7.0 REMOVAL OF SUBSTRUCTURE

7.1 Existing Substructure General

Existing substructure, bridge wide, is defined as a system of concrete columns tied together at the top by a concrete strut(s), also referred to as a pier cap. The Substructure is further defined as the portion of the bridge above the foundations and below the superstructure/deck. Areas 1, 2, 3, 5, and 6 are concrete while Area 4 is steel.

7.2 Areas 1 and 2

The typical sequence of work is outlined in the steps below:

1. Rig concrete struts and columns with crane.
2. Separate reinforced concrete connection by hammering, cutting or shearing.
3. Loft sections and land on debris barges for off-site disposal

7.3 Areas 3, 5, and 6

The typical sequence of work is outlined in the steps below:

1. Rig concrete struts and columns with crane.
2. Separate reinforced concrete connection with wire saw.
3. Loft sections and land on debris barges; downsize for off-site disposal.
4. The bottom 30-feet of the substructure will remain in place and be demolished with the foundation as described below.

7.4 Area 4 Steel Lattice Substructure

The typical sequence of work is outlined in the steps below:

1. Remove Icebreaker/Fender assemblies. Prepare rigging locations for each pick section.
2. Take the load with the crane and torch cut the pier sections.
3. Land the section with the crane on the adjacent material barge for off-site disposal.

8.0 REMOVAL OF BRIDGE FOUNDATION AND PILES

8.1 Foundation General

There are (3) major foundation types on the existing structure.

1. Timber pile supported pile cap foundations are found in Areas 1 and 2.
2. Paired solid concrete circular caissons founded on H Pile are found in Areas 3, 5, and 6, at Bents 166 – 168 and 179 – 190. These foundations are fully or partially enclosed by steel sheet pile.
3. Hollow rectangular caissons are found at in Areas 3, 4, and 5, at Bents 169 – 178. These foundations consist of cellular rooms separated by concrete walls and ceilings. Each of these foundations are founded on either H Pile or H Pile encapsulated inside circular piles.

8.2 Areas 1 and 2 – Timber Pile Caps

The typical sequence of work is as follows in Area 1B:

1. Demolish pile caps in place using hydraulic hammers and shears. Bucket rubblized material from the river bottom and place in adjacent debris barge for transport for off-site disposal.
2. Snap timber piles at the NYSDEC required demolition limit using barge mounted excavators equipped with a bucket and thumb or grapples.

The typical sequence of work is as follows in Area 2:

1. Demolish in place using hydraulic hammers and shears. Bucket rubblized material from the river bottom and place in adjacent debris barge for transport for off-site disposal.
2. Snap timber piles at the NYSDEC required demolition limit using barge mounted excavators equipped with a bucket and thumb or grapples.

8.3 Circular Caissons

The typical sequence of work is as follows:

1. Displace existing material from the river bottom with an excavator or jetting to expose sheet pile at demolition limit.

2. Mark and torch cut sheet pile at demolition limit with divers.
3. Hoe ram the remaining 30-feet of concrete column substructure, if applicable.
4. Hammer and bucket caisson to debris barges for off-site disposal.
5. Sheet pile removal shall occur at any time during this operation.
6. If applicable, cut and remove H pile at the base of caisson.

8.4 Rectangular Caissons

The typical sequence of work is as follows:

1. Install temporary [redacted] spuds as needed around pier perimeter with vibratory pile driver/ extractor. Piles are for mooring/fendering of work barges.
2. To the extent possible start demolition inside of the exterior walls, beginning with the roof of the caisson and continuing to the intermediate floors and interior walls.
3. Advance demolition and removal of the exterior walls.
4. Demolish via hoe ramming, cutting and shearing.
5. Remove debris throughout the operation via bucketing. All debris will be removed to the NYSDEC required demolition limit.

9.0 REMOVAL OF ICEBREAKER AND FENDER

9.1 Timber Pile Clusters – Bents 4 – 165

The typical sequence of events is as follows:

1. Install full depth turbidity curtains prior to work commencing at Bents 4 – 30.
2. Snap timber piles at the NYSDEC required demolition limit with excavators equipped with a bucket and thumb or grapples.
3. Any timbers that break above the required depth below the river bottom may be removed during the demolition of the pile caps.

9.2 Timber/Steel Fender Frame – Bents 169 – 173 and 178

The typical sequence of events is as follows:

1. Rig sections of the timber/steel fender with barge mounted crane or excavator.
2. Displace material to expose pile to the NYSDEC required demolition limit.
3. Cut pile supports to the NYSDEC required demolition limit with divers or excavator mounted shear.

4. Torch cut and loft section to debris barge for off-site disposal.
5. Alternatively to cutting pile, pile may be extracted with a vibratory hammer.

9.3 Triangular Concrete Icebreakers

The typical sequence of events is as follows:

1. Displace existing material from the river bottom with an excavator or jetting to expose sheet pile.
2. Mark and torch cut sheet piles at demolition limits by divers.
3. Hammer and bucket concrete to debris barges for off-site disposal.
4. Sheet pile removal shall occur at any time during this operation.
5. If applicable, cut and remove H pile and or timber pile at the base of ice breaker.

9.4 Main Span Fender

The typical sequence of events is as follows:

1. Wire saw or otherwise cut fender into sections, remaining supported by [redacted] steel pile.
2. Drill and/or install rigging locations.
3. Rig sections with barge mounted crane.
4. Perform additional wire sawing, if applicable.
5. Separate rigged precast section from [redacted] pile with wire saw, shear, torch or other cutting method, if applicable.
6. Loft and land section on debris barge for off-disposal.
7. Displace existing material from the river bottom with a bucket or jetting to the NYSDEC required demolition limit
8. Torch cut or shear remaining [redacted] pile at the NYSDEC required demolition limit and place on debris barge for off-disposal.

10.0 BARGE TRANSFER OF MATERIALS

Materials not reused or recycled will be transported to an appropriate, permitted off-site disposal facility. TZC has awarded the following disposal contracts for the disposal of demolition material:

- **ACK Marine and General Contracting, LLC.**
  - Disposal Location: Port of Coeymans, New York
  - Distance from Tappan Zee Bridge Site: 100 Nautical Miles
  - Demolition Material: Concrete Rubble

- Estimated Number of Shipments: 160
- Disposal Shipping Method: Barge

- **CS Construction Logistics, LLC.**
  - Disposal Location: Port of Coeymans, New York
  - Distance from Tappan Zee Bridge Site: 100 Nautical Miles
  - Demolition Material: Timber Pile (Creosote/CCA treated and untreated,)
  - Estimated Number of Shipments: 74
  - Disposal Shipping Method: Barge

- **SIMS Metal Management**
  - Disposal Locations:
    - SIMS Albany, New York
      - Distance from Tappan Zee Bridge Site: 101 Nautical Miles
      - Estimated Number of Shipments: 24
    - SIMS New Jersey
      - Distance from Tappan Zee Bridge Site: 30 Nautical Miles
      - Estimated Number of Shipments: 20
  - Demolition Material: Steel Lattice, Underdeck Truss, Anchor Span Truss, Suspended Span Truss and Cantilever Span
  - Disposal Shipping Method: Barge

- **Weeks Marine Inc.**
  - Disposal Contract Date: October 20, 2017
  - Disposal Locations:
    - Perth Amboy, NJ
      - Distance from Tappan Zee Bridge Site: 44 Nautical Miles
      - Estimated Number of Shipments: 75
      - Demolition Material: Precast Deck Panels, exodermic deck panels, concrete substructure, concrete pile caps and precast concrete fenders
      - Disposal Shipping Method: Barge
      - Processed Concrete will be disposed of as follows:
        - Fire Island Reef
          - Distance from Perth Amboy: 49 Nautical Miles
          - Estimated Number of Shipments: 4

- Moriches Reef
  - Distance from Perth Amboy:71 Nautical Miles
  - Estimated Number of Shipments: 2
- Shinnecock Reef
  - Distance from Perth Amboy: 85 Nautical Miles
  - Estimated Number of Shipments: 1
- Rockaway Reef
  - Distance from Perth Amboy: 20 Nautical Miles
  - Estimated Number of Shipments: 2
- Hempstead Reef
  - Distance from Perth Amboy: 34 Nautical Miles
  - Estimated Number of Shipments: 5

- Port of Coeymans, NY
  - Distance from Tappan Zee Bridge Site: 100 Nautical Miles
  - Estimated Number of Shipments: 15
  - Demolition Material: substructure and substructure caps
  - Disposal Shipping Method: Barge
- Jersey City, NJ
  - Distance from Tappan Zee Bridge Site: 30 Nautical Miles
  - Estimated Number of Shipments: 15
  - Demolition Material: Precast Deck Panels, exodermic deck panels, concrete substructure, concrete pile caps and precast concrete fenders
  - Disposal Shipping Method: Barge

Attachment A

Bents 190/191 Plans and Sections

NO CHANGE FROM REVISION 6

Attachment B
Bents 190/191 Site Photos

NO CHANGE FROM REVISION 6

Attachment C
Area Map and Designations

NO CHANGE FROM REVISION 6

Attachment D
Bridge Structure Definitions

NO CHANGE FROM REVISION 6

Attachment E
Demolition Schedule

NO CHANGE FROM REVISION 6

Attachment F
Debris Removal Depiction

NO CHANGE FROM REVISION 6

Attachment G
Turbidity Curtain Detail

NO CHANGE FROM REVISION 6

Attachment H
Debris Containment

NO CHANGE FROM REVISION 6

Attachment I
Timber Pile Removal

NO CHANGE FROM REVISION 6

Attachment J

Sitewide and Area 2 Rockland Causeway Foundation Removal Best Management Practices

NO CHANGE FROM REVISION 6

Attachment K
NYSDEC Required Demolition Limits

NO CHANGE FROM REVISION 6

Attachment L
Salvage Procedure

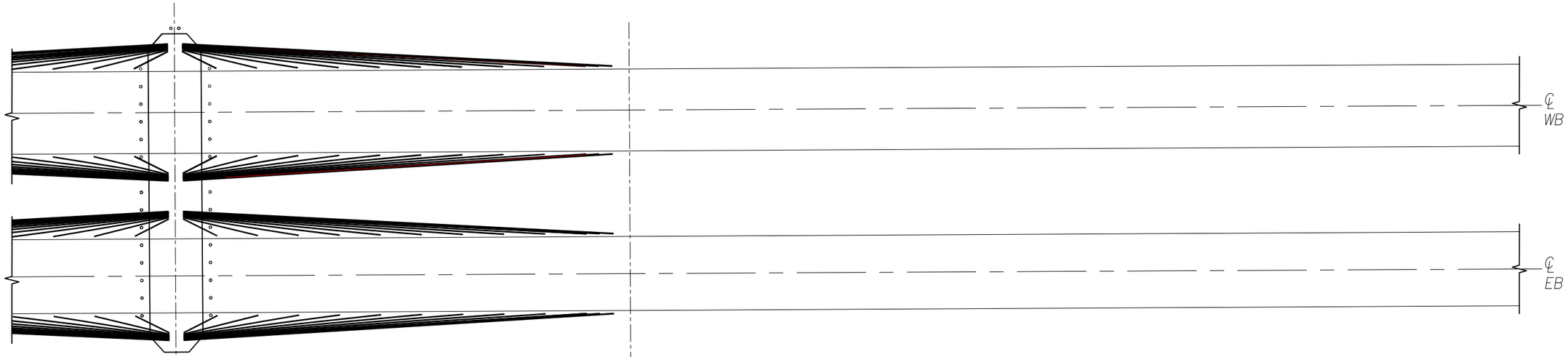

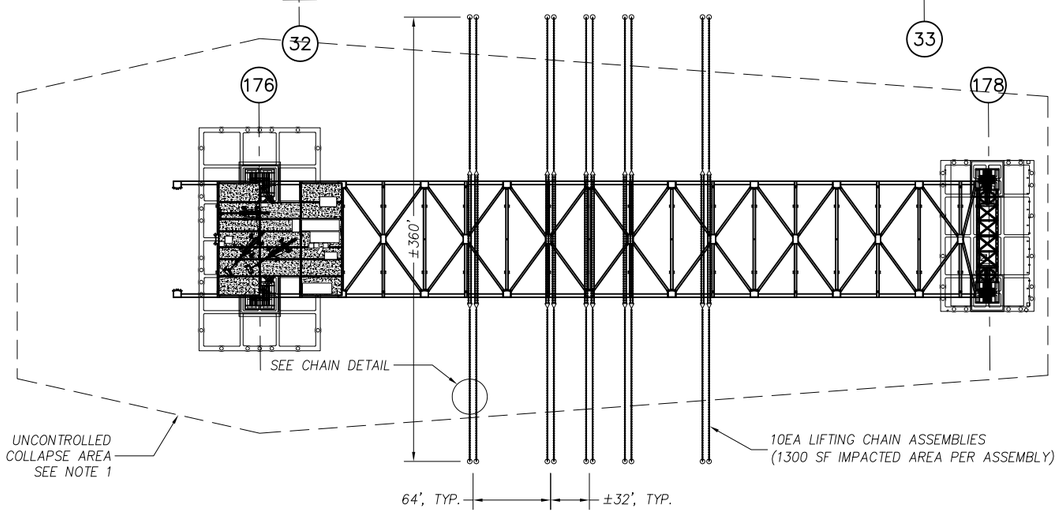

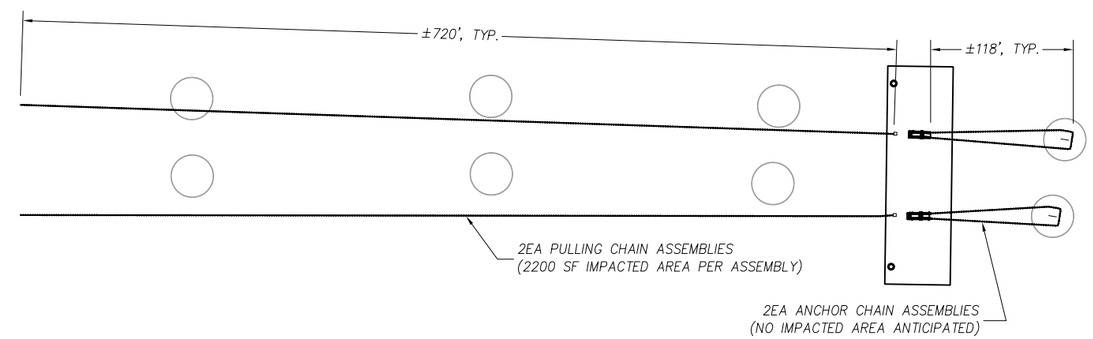

EAST ANCHOR CHAIN LAYOUT – PLAN VIEW

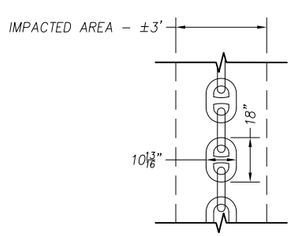

CHAIN DETAIL

NOTES:
1. THE UNCONTROLLED COLLAPSE AREA IDENTIFIES THE EXTENTS OF THE PREDICTED UNCONTROLLED COLLAPSE IMPACTED AREA.

ALTERED ON:	AFFIXED ON:
SIGNATURE: STAMP:	SIGNATURE: STAMP:

IT IS A VIOLATION OF LAW FOR ANY PERSON, UNLESS THEY ARE ACTING UNDER THE DIRECTION OF A LICENSED PROFESSIONAL ENGINEER, ARCHITECT, LANDSCAPE ARCHITECT, OR LAND SURVEYOR, TO ALTER AN ITEM IN ANY WAY. IF AN ITEM BEARING THE STAMP OF A LICENSED PROFESSIONAL IS ALTERED, THE ALTERING ENGINEER, ARCHITECT, LANDSCAPE ARCHITECT, OR LAND SURVEYOR SHALL STAMP THE DOCUMENT AND INCLUDE THE NOTATION "ALTERED BY" FOLLOWED BY THEIR SIGNATURE, THE DATE OF SUCH ALTERATION, AND A SPECIFIC DESCRIPTION OF THE ALTERATION.

NEW YORK STATE THRUWAY AUTHORITY
DEPARTMENT OF ENGINEERING
200 SOUTHERN BLVD., ALBANY, NY 12209

TITLE OF PROJECT: THE NEW NY BRIDGE
CONTRACT NUMBER: D214134
LOCATION OF PROJECT: PIN 8TZ.100 TANY 12–18B
MILEPOST 14.67 +/- IN
ROCKLAND & WESTCHESTER COUNTIES

TAPPAN ZEE CONSTRUCTORS, LLC

REVISIONS

REV	DATE	BY	CHK BY	DESCRIPTION
6				
5				
4				
3				
2				
1	11-5-18	AR	BY	ADDED IMPACT AREA

DESIGNED BY: A REEVE
DESIGN CH'K BY: A REICHARD
DRAWN BY: A REEVE
DRAWING CH'K BY: A REICHARD
SUPERVISOR: B YAFFEE

TITLE OF DRAWING
TZC DEMOLITION WORKS
AREA 4 MAINSPAN
EAST A/S REMOVAL
CHAIN DEPLOYMENT

DATE: 10-18-18
DRAWING NUMBER: TZC-01A
REVISION: 01A

DOCUMENT TRACKING CODE:

October 31, 2018 U:\500_Construction\Demolition\12 BLANK\CMP\TCZ-929 – Anchor Span Monitoring\Span Monitoring_02.dwg

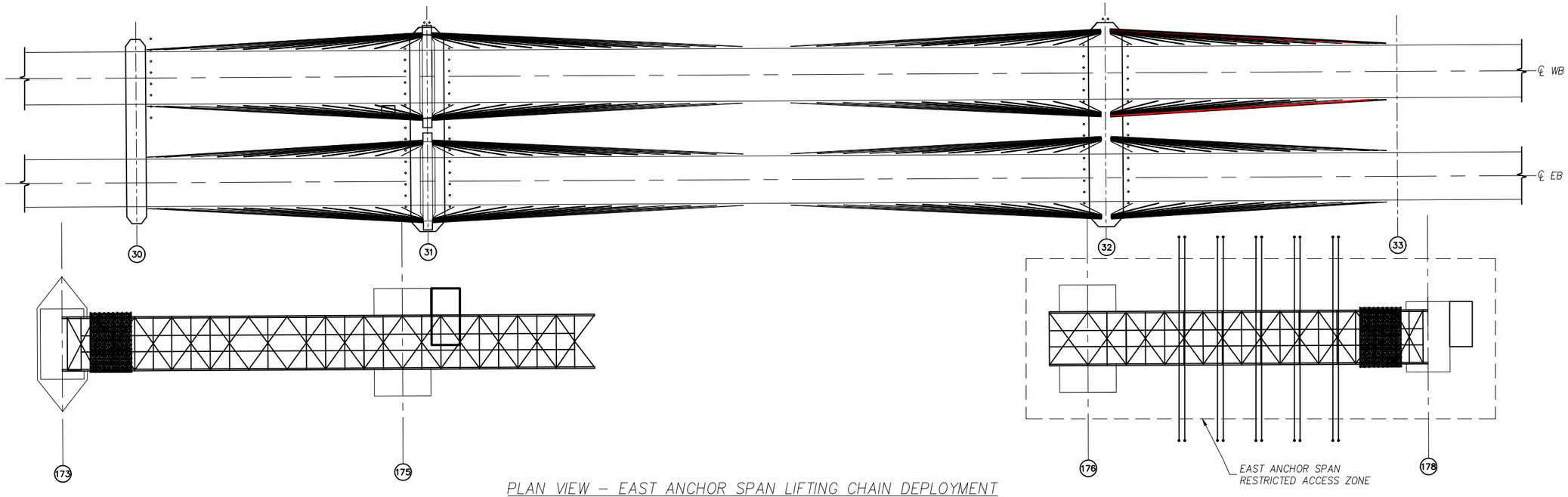

PLAN VIEW – EAST ANCHOR SPAN LIFTING CHAIN DEPLOYMENT

GENERAL NOTES:

1. ACTIVITIES ADJACENT TO THE RESTRICTED ACCESS ZONE SHALL BE LIMITED TO THE ACTIVITIES DESCRIBED IN THIS DRAWING SET.
2. PRIOR TO THE OPERATIONS EXPLAINED IN THIS DRAWING SET, LIVE VGO BRIDGE MONITORING SHALL BE INSTALLED
   - 2.1. LIVE VGO BRIDGE MONITORING DETAILS SHALL BE COVERED BY SEPARATE CWP

EQUIPMENT LIST:

1. TZC EQUIPMENT
   - 1.1. LR1300 CRANE (272' BOOM, 100' x 100' FLEXI-FLOAT)
   - 1.2. LR1300 CRANE (TOMKINS COVE, 223' BOOM, CRAWLER)
   - 1.3. TZC-324 (35' x 195' BARGE)
   - 1.4. TZC-323 (35' x 195' BARGE)
   - 1.5. KS5512 (55' x 120' BARGE)
   - 1.6. TUGBOAT YANKEE (1200 HP)
   - 1.7. TUGBOAT PILGRIM (1400 HP)
   - 1.8. DECK WINCH LOCATED ON KS5512
   - 1.9. WELDING MACHINE
2. MATERIALS LIST
   - 2.1. (20) – 360' x 3" STUDDED ANCHOR CHAIN
     - 2.1.1. 125' SINGLE PART SECTIONS, 110' DOUBLE PART SECTIONS
   - 2.2. (20) – 110' MIN. SECTIONS, ¾" WIRE ROPE
   - 2.3. (20) – 50' SECTIONS, POLY HAND LINE
   - 2.4. (20) – 3' NORWEGIAN BUOYS
   - 2.5. (24) – WT6x29 PAD-EYES
   - 2.6. (40) – 30' x 4' CRANE MATS
   - 2.7. (49) – 20' x 4' CRANE MATS
   - 2.8. (24) – 12' x ⅝" SLINGS/MOLLY-HOGANS
   - 2.9. (24) – 17T SHACKLES

ALTERED ON:	AFFIXED ON:
SIGNATURE: STAMP:	SIGNATURE: STAMP:

NEW YORK STATE THRUWAY AUTHORITY
DEPARTMENT OF ENGINEERING
200 SOUTHERN BLVD., ALBANY, NY 12209

HOLT & ASSOCIATES

TITLE OF PROJECT	CONTRACT NUMBER
THE NEW NY BRIDGE	D214134

LOCATION OF PROJECT PIN 8TZ.100 TANY 12-18B
MILEPOST 14.67 +/- IN
ROCKLAND & WESTCHESTER COUNTIES

TAPPAN ZEE CONSTRUCTORS, LLC

REVISIONS

REV	DATE	BY	CHK BY	DESCRIPTION
6				
5				
4				
3				
2				
1				

DESIGNED BY:	A. REICHARD
DESIGN CH'K BY:	A. REEVE
DRAWN BY:	A. REICHARD
DRAWING CH'K BY:	A. REEVE
SUPERVISOR:	B YAFFEE

TITLE OF DRAWING
TZC DEMOLITION WORKS
AREA 4 MAINSPAN
EAST A/S REMOVAL
LIFING CHAIN DEPLOYMENT

DATE: 10-11-18
DRAWING NUMBER: TZC-0930-01
REVISION: 00A

DOCUMENT TRACKING CODE:

October 12, 2018 U:\500_Construction\Demolition\12 BLANK\CWP\TZC-930 – Anchor Chain Deployment\DWG\RESOLVE Chain Laydown Tugboat.dwg

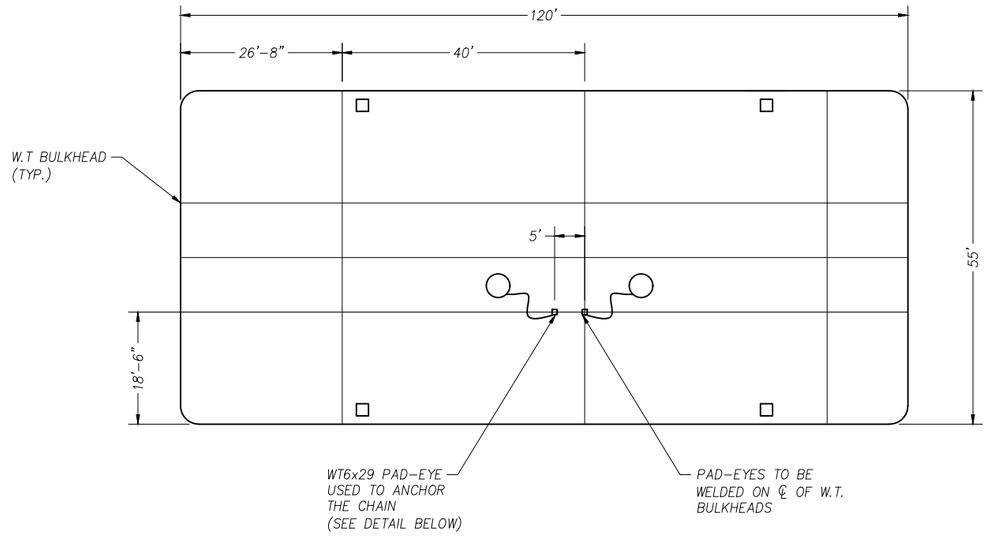

ANCHOR CHAIN ANCHORING LOCATIONS
KS5512 BARGE
PLAN VIEW

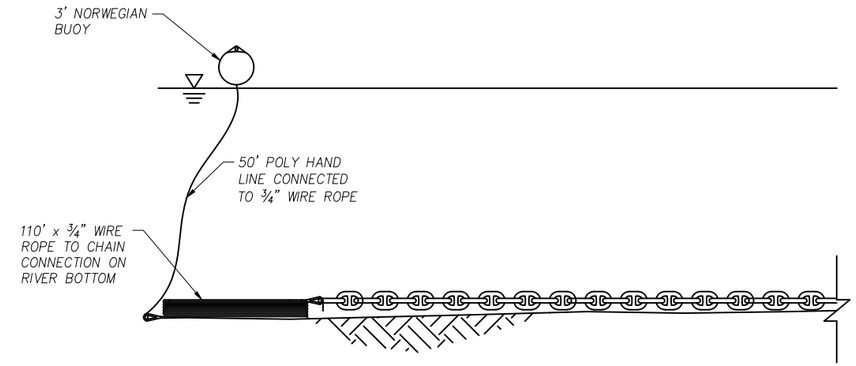

CHAIN TO BUOY CONNECTION
(ENLARGED TO SHOW DETAIL)

GENERAL SEQUENCE:
1. PRIOR TO THE ANCHOR CHAIN DELIVERY, OUTFIT (1) – 55' x 120' (KS5512) BARGE WITH MATERIALS SHOWN ON THIS SHEET
2. WELD ANCHOR PAD-EYES IN LOCATIONS SHOWN ON ℄'S OF BULKHEADS
3. BEFORE DEPLOYMENT OPERATION TAKES PLACE INSTALL NORWEGIAN BUOY TO POLY HAND LINE CONNECTION, AS WELL AS POLY LINE TO ¾" WIRE ROPE CONNECTION
4. CONNECT 3" STUDDED ANCHOR CHAIN TO PAD-EYE WITH A ⅝" 4-WAY BASKET AND A 17T SHACKLE (MAY USE LR1300 FOR SUPPORT AS SEEN ON SHEET 6)

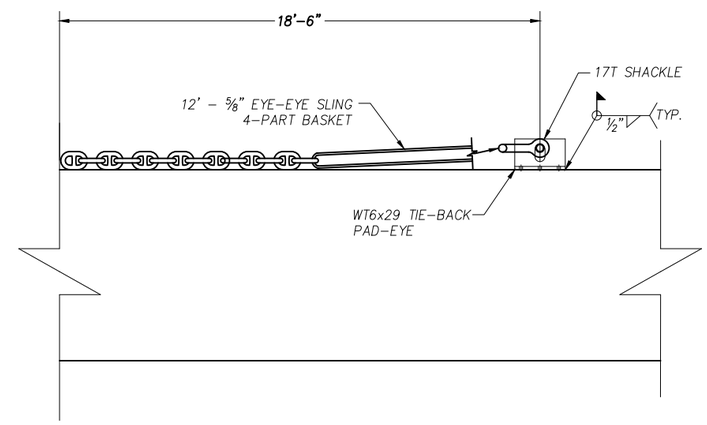

CHAIN TO ANCHOR PAD-EYE
CONNECTION
(ENLARGED TO SHOW DETAIL)

ALTERED ON:	AFFIXED ON:
SIGNATURE: STAMP:	SIGNATURE: STAMP:

NEW YORK STATE THRUWAY AUTHORITY
DEPARTMENT OF ENGINEERING
200 SOUTHERN BLVD., ALBANY, NY 12209

TITLE OF PROJECT: THE NEW NY BRIDGE
CONTRACT NUMBER: D214134
LOCATION OF PROJECT: PIN 8TZ.100 TANY 12-18B
MILEPOST 14.67 +/- IN
ROCKLAND & WESTCHESTER COUNTIES

TAPPAN ZEE CONSTRUCTORS, LLC

REVISIONS

REV	DATE	BY	CHK BY	DESCRIPTION
6				
5				
4				
3				
2				
1				

DESIGNED BY:	A. REICHARD
DESIGN CH'K BY:	A. REEVE
DRAWN BY:	A. REICHARD
DRAWING CH'K BY:	A. REEVE
SUPERVISOR:	B YAFFEE

TITLE OF DRAWING
TZC DEMOLITION WORKS
AREA 4 MAINSPAN
EAST A/S REMOVAL
LIFING CHAIN DEPLOYMENT

DATE: 10-11-18
DRAWING NUMBER: TZC-0930-05
REVISION: 00A

DOCUMENT TRACKING CODE:

October 12, 2018 U:\500_Construction\Demolition\12 BLANK\CWP\TZC-930 - Anchor Chain Deployment\DWG\RESOLVE Chain Laydown Tugboat.dwg

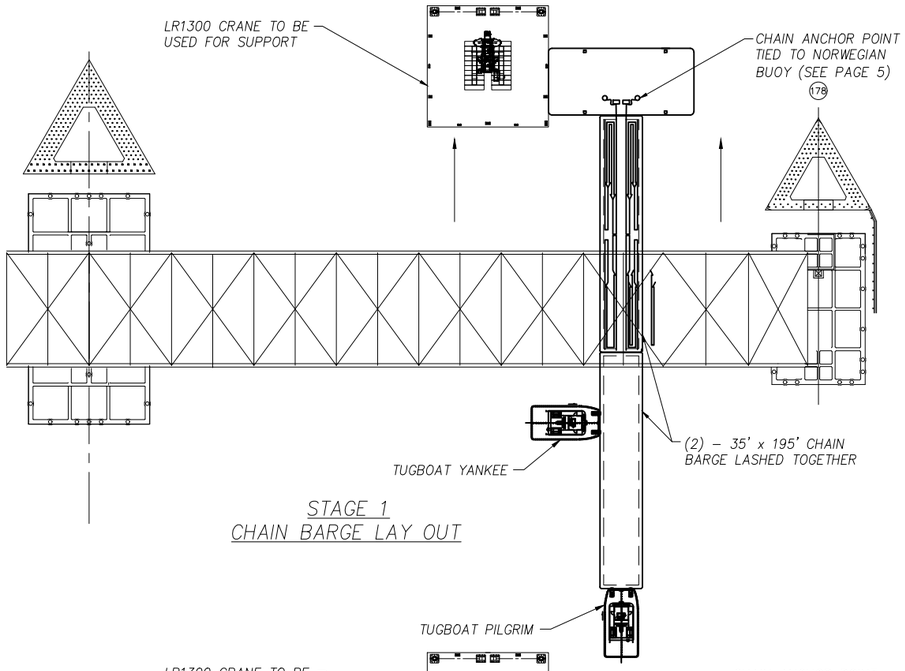

STAGE 1
CHAIN BARGE LAY OUT

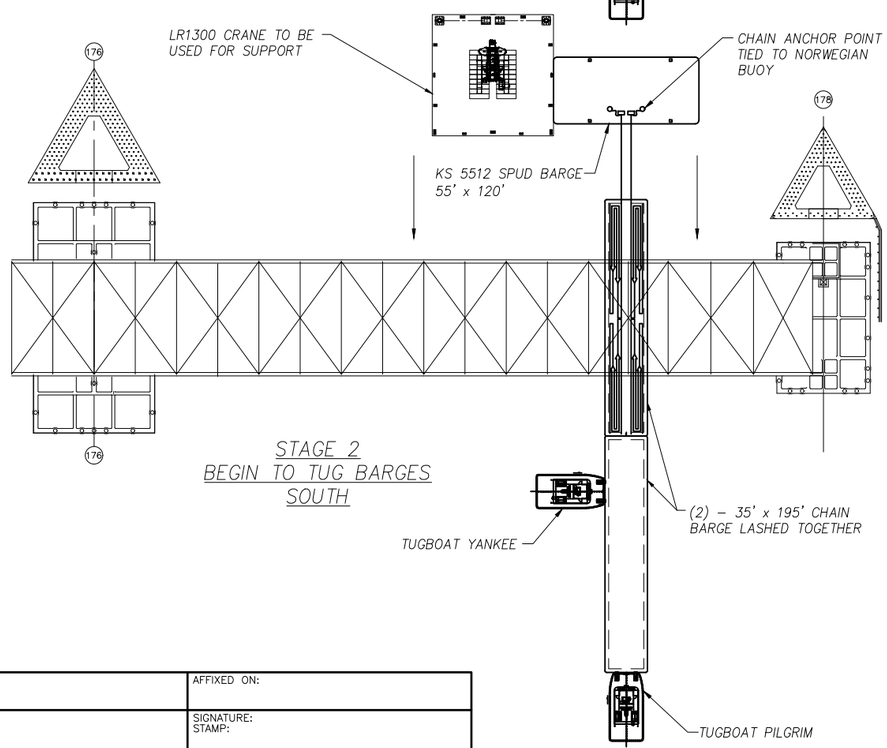

STAGE 2
BEGIN TO TUG BARGES SOUTH

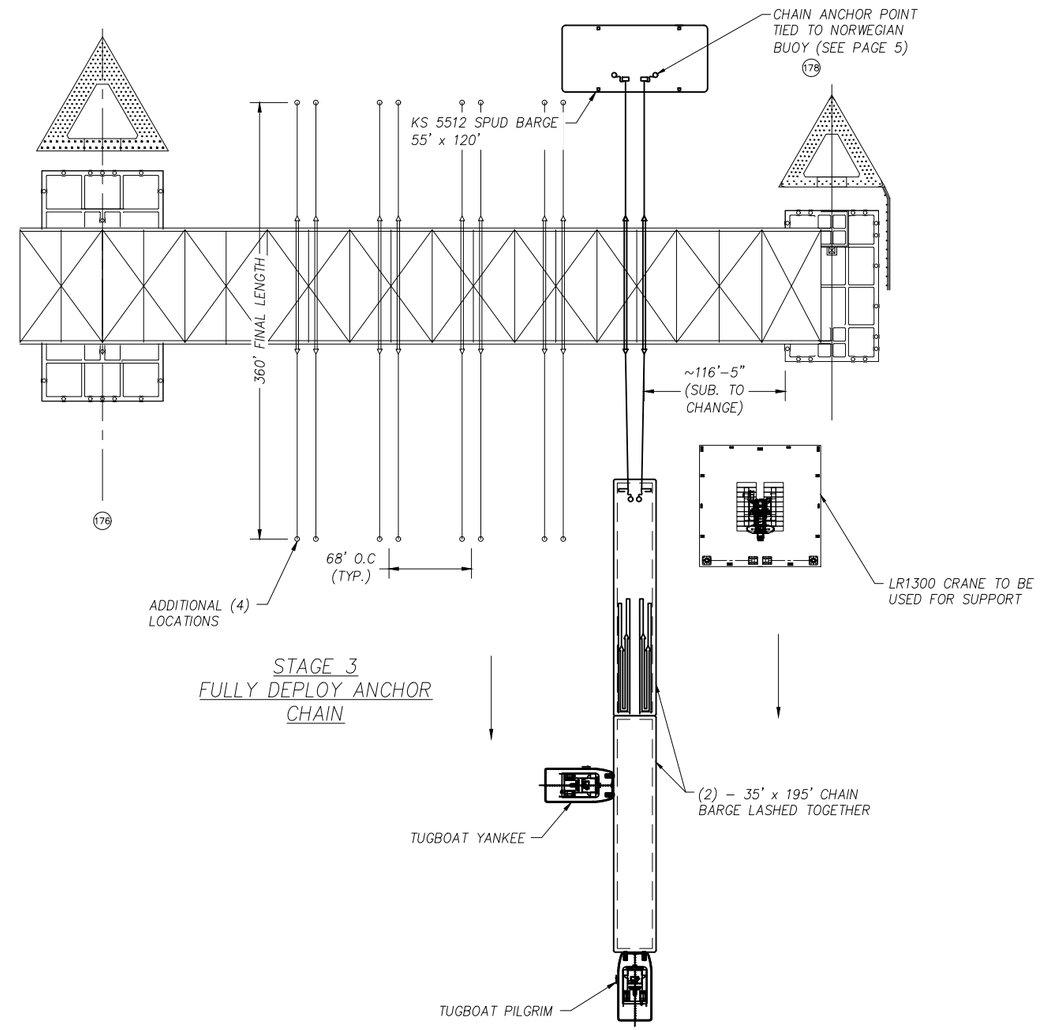

STAGE 3
FULLY DEPLOY ANCHOR CHAIN

NORTH

GENERAL SEQUENCE:
1. GATHER 3" CHAIN AND STAGE (10) TEN 360' LONG SECTIONS ON BARGES (5 EA ON 2 – 35' x 195' BARGES)
2. STATION KS5512 BARGE AND 35' x 195' CHAIN BARGE INTO POSITION AS SHOWN AND ANCHOR CHAIN TO THE KS5512
4. BEGIN TO SLOWLY TUG THE 35' x 195' BARGES SOUTH SO THE CHAIN GRADUALLY RUNS OFF THE BARGE AND INTO THE WATER
5. CONTINUE TO TUG SOUTH UNTIL THERE IS MINIMAL CHAIN LEFT ON THE BARGE.
6. RELEASE REMAINING CHAIN AND BUOY INTO THE WATER ON SOUTH SIDE AND DE-ANCHOR THE CHAIN AND BUOY ON THE NORTH SIDE
7. REPEAT STEPS 2-5 UNTIL ALL NECESSARY CHAIN IS LAID OUT

ALTERED ON:	AFFIXED ON:
SIGNATURE: STAMP:	SIGNATURE: STAMP:

NEW YORK STATE THRUWAY AUTHORITY
DEPARTMENT OF ENGINEERING
200 SOUTHERN BLVD., ALBANY, NY 12209

TITLE OF PROJECT	CONTRACT NUMBER
THE NEW NY BRIDGE	D214134

LOCATION OF PROJECT PIN 8TZ.100 TANY 12-18B
MILEPOST 14.67 +/- IN
ROCKLAND & WESTCHESTER COUNTIES

TAPPAN ZEE CONSTRUCTORS, LLC

REVISIONS

REV	DATE	BY	CHK BY	DESCRIPTION
6				
5				
4				
3				
2				
1				

DESIGNED BY:	A. REICHARD
DESIGN CH'K BY:	A. REEVE
DRAWN BY:	A. REICHARD
DRAWING CH'K BY:	A. REEVE
SUPERVISOR:	B YAFFEE

TITLE OF DRAWING
TZC DEMOLITION WORKS
AREA 4 MAINSPAN
EAST A/S REMOVAL
LIFING CHAIN DEPLOYMENT

DATE: 10-11-18
DRAWING NUMBER: TZC-0930-06
REVISION: 00A

DOCUMENT TRACKING CODE:

October 12, 2018 U:\500_Construction\Demolition\12 BLANK\CWP\TZC-930 – Anchor Chain Deployment\DWG\RESOLVE Chain Laydown Tugboat.dwg

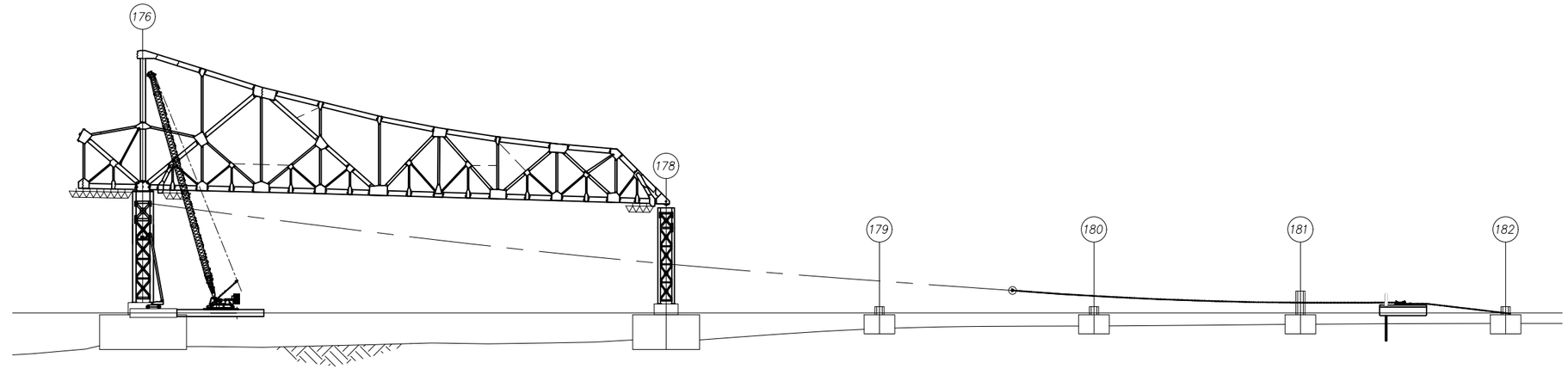

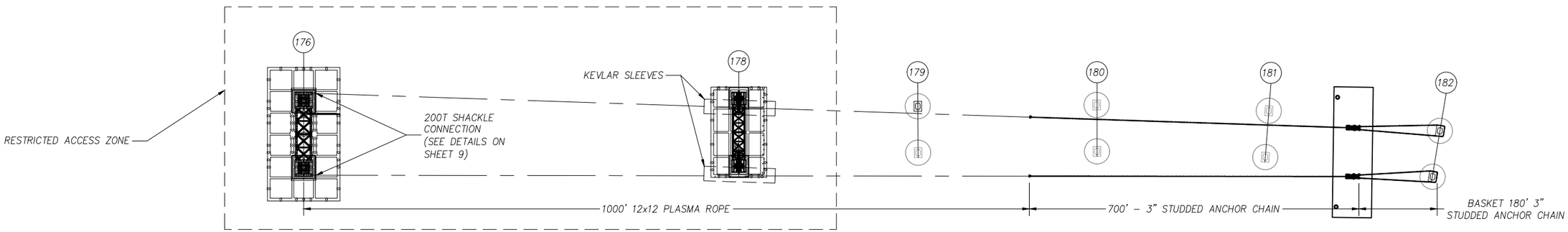

EAST ANCHOR SPAN PULL–DOWN – OVERVIEW

GENERAL NOTES: PULLER CHAIN DEPLOYMENT

1. ACTIVITIES ADJACENT TO THE RESTRICTED ACCESS ZONE SHALL BE LIMITED TO THE ACTIVITIES DESCRIBED IN THIS DRAWING SET.
2. PRIOR TO THE OPERATIONS EXPLAINED IN THIS DRAWING SET, LIVE VGO BRIDGE MONITORING SHALL BE INSTALLED
   - 2.1. LIVE VGO BRIDGE MONITORING DETAILS SHALL BE COVERED BY SEPARATE CWP

EQUIPMENT LIST:

1. TZC EQUIPMENT
   - 1.1. THOMAS W CRANE (240' BOOM, 225' x 78' BARGE)
   - 1.2. TZC–324 (35' x 195' BARGE)
   - 1.3. SEI 180–5 (54' x 180' BARGE)
   - 1.4. TUGBOAT YANKEE (1200 HP)
   - 1.5. TUGBOAT PILGRIM (1400 HP)
   - 1.6. WELDING MACHINE
2. MATERIALS LIST
   - 2.1. (2) – 180' x 3" STUDDED ANCHOR CHAIN
   - 2.2. (2) – 700' x 3" STUDDED ANCHOR CHAIN (TO BE ASSEMBLED IN SECTIONS ON–SITE)
   - 2.3. (2) 1000'± DYNEMA PLASMA ROPE
   - 2.4. (4) – 110' MIN. SECTIONS, ¾" WIRE ROPE
   - 2.5. (4) – 50' SECTIONS, POLY HAND LINE
   - 2.6. (4) – 3' NORWEGIAN BUOYS
   - 2.7. (2) – 125T SHACKLE
   - 2.8. (4) – 85T SHACKLES
   - 2.9. (2) 1⅛" 9–PART BRIDLE
3. REF. CWP–0930 HOISTING CHAIN DEPLOYMENT FOR BARGE OUTFIT DETAILS AND MATERIALS ASSOCIATED

ALTERED ON:	AFFIXED ON:
SIGNATURE: STAMP:	SIGNATURE: STAMP:

NEW YORK STATE THRUWAY AUTHORITY
DEPARTMENT OF ENGINEERING
200 SOUTHERN BLVD., ALBANY, NY 12209

TITLE OF PROJECT	CONTRACT NUMBER
THE NEW NY BRIDGE	D214134

LOCATION OF PROJECT PIN 8TZ.100 TANY 12–18B
MILEPOST 14.67 +/- IN
ROCKLAND & WESTCHESTER COUNTIES

TAPPAN ZEE CONSTRUCTORS, LLC

REVISIONS

REV	DATE	BY	CHK BY	DESCRIPTION
6				
5				
4				
3				
2				
1				

DESIGNED BY:	A. REICHARD
DESIGN CH'K BY:	A. REEVE
DRAWN BY:	A. REICHARD
DRAWING CH'K BY:	A. REEVE
SUPERVISOR:	B YAFFEE

TITLE OF DRAWING
TZC DEMOLITION WORKS
AREA 4 MAINSPAN
EAST A/S REMOVAL
CHAIN PULL-DOWN

DATE: 10-16-18
DRAWING NUMBER: TZC-0931-01
REVISION: 00A

DOCUMENT TRACKING CODE:

GENERAL SEQUENCE:

1. 35' x 195' BARGE ARRIVES TO HUDSON HARBOR WITH (6) SECTIONS OF 3" STUDDED ANCHOR CHAIN (4 – 250' SECTIONS, 2 – 200' SECTIONS)
2. USE THOMAS W TO SET (2) – 180' SECTIONS OF CHAIN (FROM THE SEI 180–5) AND WRAP AROUND THE OUTER PERIMETER OF THE 182 HOLLOW COLUMNS. CONNECT BACK TO CHAIN PULLERS OR LEAVE IN PILES ON CAISSONS UNTIL READY TO CONNECT.
2. ATTACH WIRE ROPE AND NORWEGIAN BUOY TO CHAIN BEFORE LIFTING OFF BARGE
3. THOMAS W TO PICK THE NORTHWESTERN 250' SECTION AND BOOM UP, CABLE UP UNTIL IT IS FULLY VERTICAL.
4. START CABLING DOWN AND SWINGING FROM EAST TO WEST, LAYING DOWN THE CHAIN ON THE RIVER BED SLOWLY (TO AVOID SIDE LOADING THE BOOM) UNTILTHE CHAIN BARGE HAS BEEN REACHED (SEE FINAL ELEVATION BELOW)
5. CONNECT THE 250' SECTION TO THE 200' SECTION ON THE BARGE
6. UNHOOK THE CHAIN FROM THE HOOK.

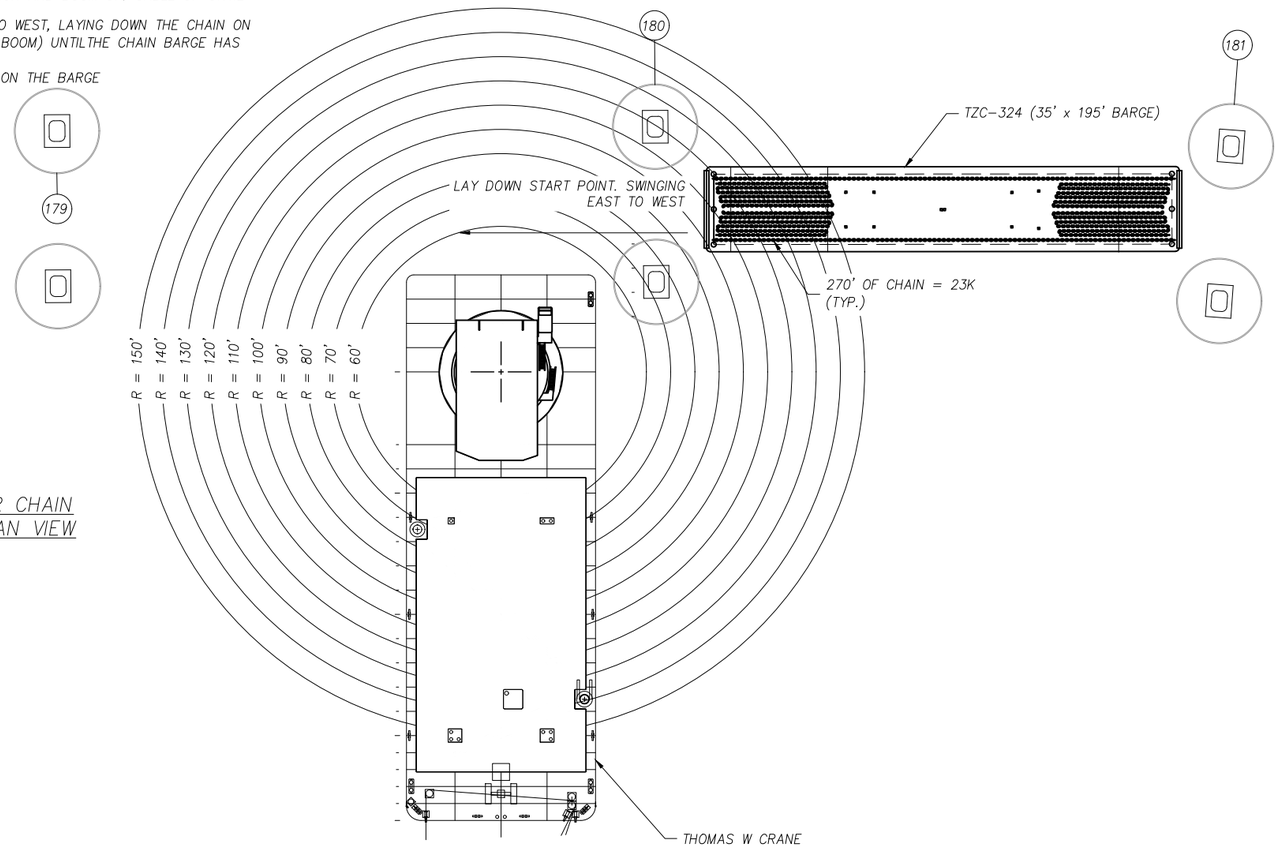

EAST ANCHOR SPAN PULLER CHAIN DEPLOYMENT – STAGE 1 PLAN VIEW (NORTH SIDE)

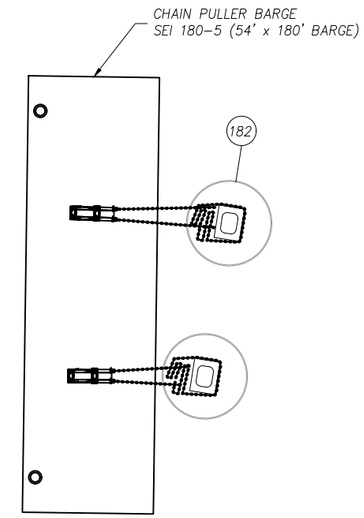

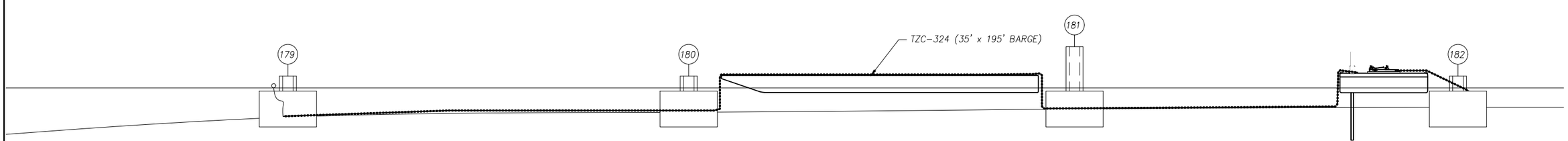

EAST ANCHOR SPAN PULLER CHAIN DEPLOYMENT – ELEVATION VIEW (FINAL)

ALTERED ON:	AFFIXED ON:
SIGNATURE: STAMP:	SIGNATURE: STAMP:

NEW YORK STATE THRUWAY AUTHORITY
DEPARTMENT OF ENGINEERING
200 SOUTHERN BLVD., ALBANY, NY 12209

TITLE OF PROJECT: THE NEW NY BRIDGE
CONTRACT NUMBER: D214134
LOCATION OF PROJECT: PIN 8TZ.100 TANY 12–18B
MILEPOST 14.67 +/- IN
ROCKLAND & WESTCHESTER COUNTIES

TAPPAN ZEE CONSTRUCTORS, LLC

REVISIONS

REV	DATE	BY	CHK BY	DESCRIPTION
6				
5				
4				
3				
2				
1				

DESIGNED BY: A. REICHARD
DESIGN CH'K BY: A. REEVE
DRAWN BY: A. REICHARD
DRAWING CH'K BY: A. REEVE
SUPERVISOR: B YAFFEE

TITLE OF DRAWING
TZC DEMOLITION WORKS
AREA 4 MAINSPAN
EAST A/S REMOVAL
CHAIN PULL-DOWN

DATE: 10-16-18
DRAWING NUMBER: TZC-0931-03
REVISION: 00A

DOCUMENT TRACKING CODE:

October 17, 2018 U:\500_Construction\Demolition\12 BLANK\CWP\TZC-931 – Dynema Rope And Puller Chain Deployment\Dynema And Puller Chain Deployment.dwg

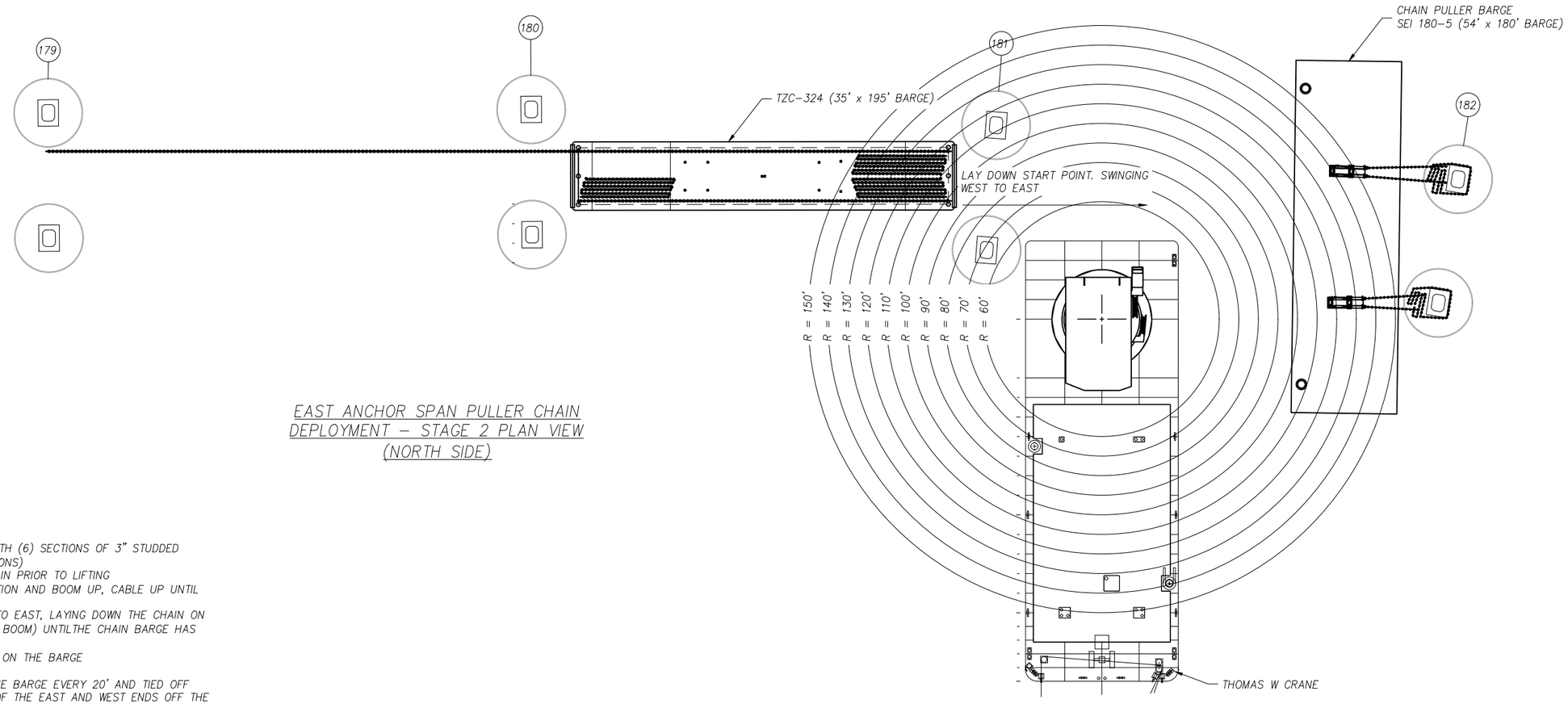

EAST ANCHOR SPAN PULLER CHAIN DEPLOYMENT – STAGE 2 PLAN VIEW (NORTH SIDE)

GENERAL SEQUENCE:

1. 35' x 195' BARGE ARRIVES TO HUDSON HARBOR WITH (6) SECTIONS OF 3" STUDDED ANCHOR CHAIN (4 – 250' SECTIONS, 2 – 200' SECTIONS)
2. ATTACH NORWEGIAN BUOY AND WIRE ROPE TO CHAIN PRIOR TO LIFTING
2. THOMAS W TO PICK THE NORTHEASTERN 250' SECTION AND BOOM UP, CABLE UP UNTIL IT IS FULLY VERTICAL.
3. START CABLING DOWN AND SWINGING FROM WEST TO EAST, LAYING DOWN THE CHAIN ON THE RIVER BED SLOWLY (TO AVOID SIDE LOADING THE BOOM) UNTILTHE CHAIN BARGE HAS BEEN REACHED (SEE FINAL ELEVATION BELOW)
4. CONNECT THE 250' SECTION TO THE 200' SECTION ON THE BARGE
5. UNHOOK THE CHAIN FROM THE HOOK.
6. ANCHOR LUGS TO BE WELDED TO EACH END OF THE BARGE EVERY 20' AND TIED OFF WITH SOFT LINE. ONCE ALL THE CHAIN IS DEPLOYED OF THE EAST AND WEST ENDS OFF THE BARGE THE CRANE IS TO LIFT A SECTION INTO THE WATER AND ONE OF THE SOFT LINES SHOULD BE CUT. THIS WILL CAUSE A CHAIN REACTION RESULTING IN THE REST OF THE CHAIN FALLING OFF THE BARGE

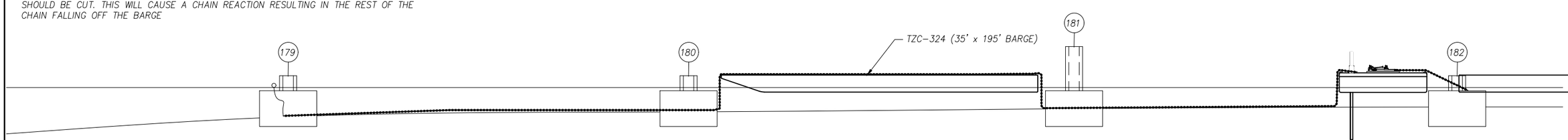

EAST ANCHOR SPAN PULLER CHAIN DEPLOYMENT – ELEVATION VIEW (FINAL)

ALTERED ON:	AFFIXED ON:
SIGNATURE: STAMP:	SIGNATURE: STAMP:

NEW YORK STATE THRUWAY AUTHORITY
DEPARTMENT OF ENGINEERING
200 SOUTHERN BLVD., ALBANY, NY 12209

TITLE OF PROJECT: THE NEW NY BRIDGE
CONTRACT NUMBER: D214134
LOCATION OF PROJECT: PIN 8TZ.100 TANY 12–18B
MILEPOST 14.67 +/- IN
ROCKLAND & WESTCHESTER COUNTIES

TAPPAN ZEE CONSTRUCTORS, LLC

REVISIONS

REV	DATE	BY	CHK BY	DESCRIPTION
6				
5				
4				
3				
2				
1				

DESIGNED BY:	A. REICHARD
DESIGN CH'K BY:	A. REEVE
DRAWN BY:	A. REICHARD
DRAWING CH'K BY:	A. REEVE
SUPERVISOR:	B YAFFEE

TITLE OF DRAWING
TZC DEMOLITION WORKS
AREA 4 MAINSPAN
EAST A/S REMOVAL
CHAIN PULL-DOWN

DATE: 10-16-18
DRAWING NUMBER: TZC-0931-04
REVISION: 00A

DOCUMENT TRACKING CODE:

October 17, 2018 U:\500_Construction\Demolition\12 BLANK\CWP\TZC-931 – Dynema Rope And Puller Chain Deployment\Dynema And Puller Chain Deployment.dwg

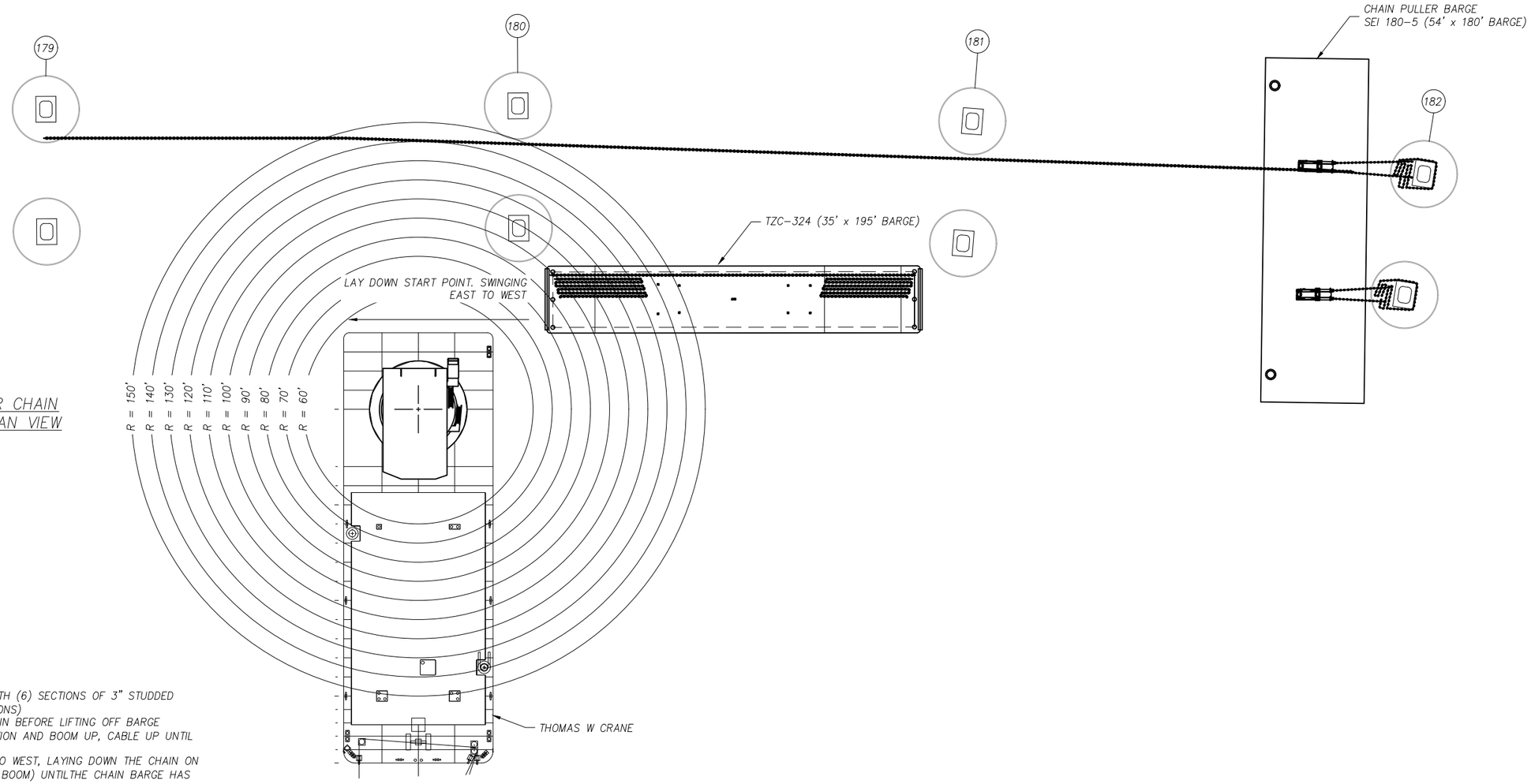

EAST ANCHOR SPAN PULLER CHAIN DEPLOYMENT – STAGE 3 PLAN VIEW (SOUTH SIDE)

GENERAL SEQUENCE:

1. 35' x 195' BARGE ARRIVES TO HUDSON HARBOR WITH (6) SECTIONS OF 3" STUDDED ANCHOR CHAIN (4 – 250' SECTIONS, 2 – 200' SECTIONS)
2. ATTACH WIRE ROPE AND NORWEGIAN BUOY TO CHAIN BEFORE LIFTING OFF BARGE
3. THOMAS W TO PICK THE SOUTHWESTERN 250' SECTION AND BOOM UP, CABLE UP UNTIL IT IS FULLY VERTICAL.
4. START CABLING DOWN AND SWINGING FROM EAST TO WEST, LAYING DOWN THE CHAIN ON THE RIVER BED SLOWLY (TO AVOID SIDE LOADING THE BOOM) UNTILTHE CHAIN BARGE HAS BEEN REACHED (SEE FINAL ELEVATION BELOW)
5. CONNECT THE 250' SECTION TO THE 200' SECTION ON THE BARGE
6. UNHOOK THE CHAIN FROM THE HOOK.

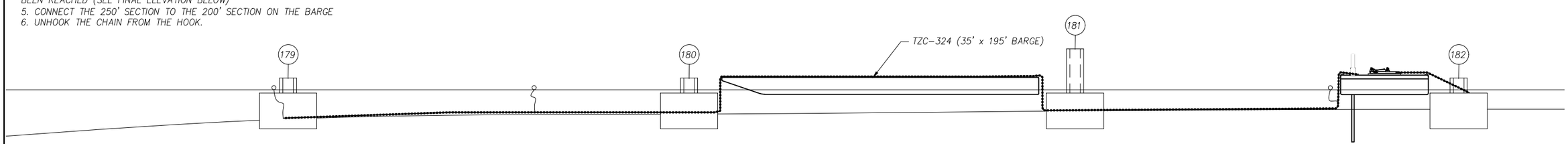

EAST ANCHOR SPAN PULLER CHAIN DEPLOYMENT – ELEVATION VIEW (FINAL)

ALTERED ON:	AFFIXED ON:
SIGNATURE: STAMP:	SIGNATURE: STAMP:

NEW YORK STATE THRUWAY AUTHORITY
DEPARTMENT OF ENGINEERING
200 SOUTHERN BLVD., ALBANY, NY 12209

TITLE OF PROJECT: THE NEW NY BRIDGE
CONTRACT NUMBER: D214134
LOCATION OF PROJECT: PIN 8TZ.100 TANY 12–18B
MILEPOST 14.67 +/- IN
ROCKLAND & WESTCHESTER COUNTIES

TAPPAN ZEE CONSTRUCTORS, LLC

REVISIONS

REV	DATE	BY	CHK BY	DESCRIPTION
6				
5				
4				
3				
2				
1				

DESIGNED BY:	A. REICHARD
DESIGN CH'K BY:	A. REEVE
DRAWN BY:	A. REICHARD
DRAWING CH'K BY:	A. REEVE
SUPERVISOR:	B YAFFEE

TITLE OF DRAWING
TZC DEMOLITION WORKS
AREA 4 MAINSPAN
EAST A/S REMOVAL
CHAIN PULL-DOWN

DATE: 10-16-18
DRAWING NUMBER: TZC-0931-05
REVISION: 00A

DOCUMENT TRACKING CODE:

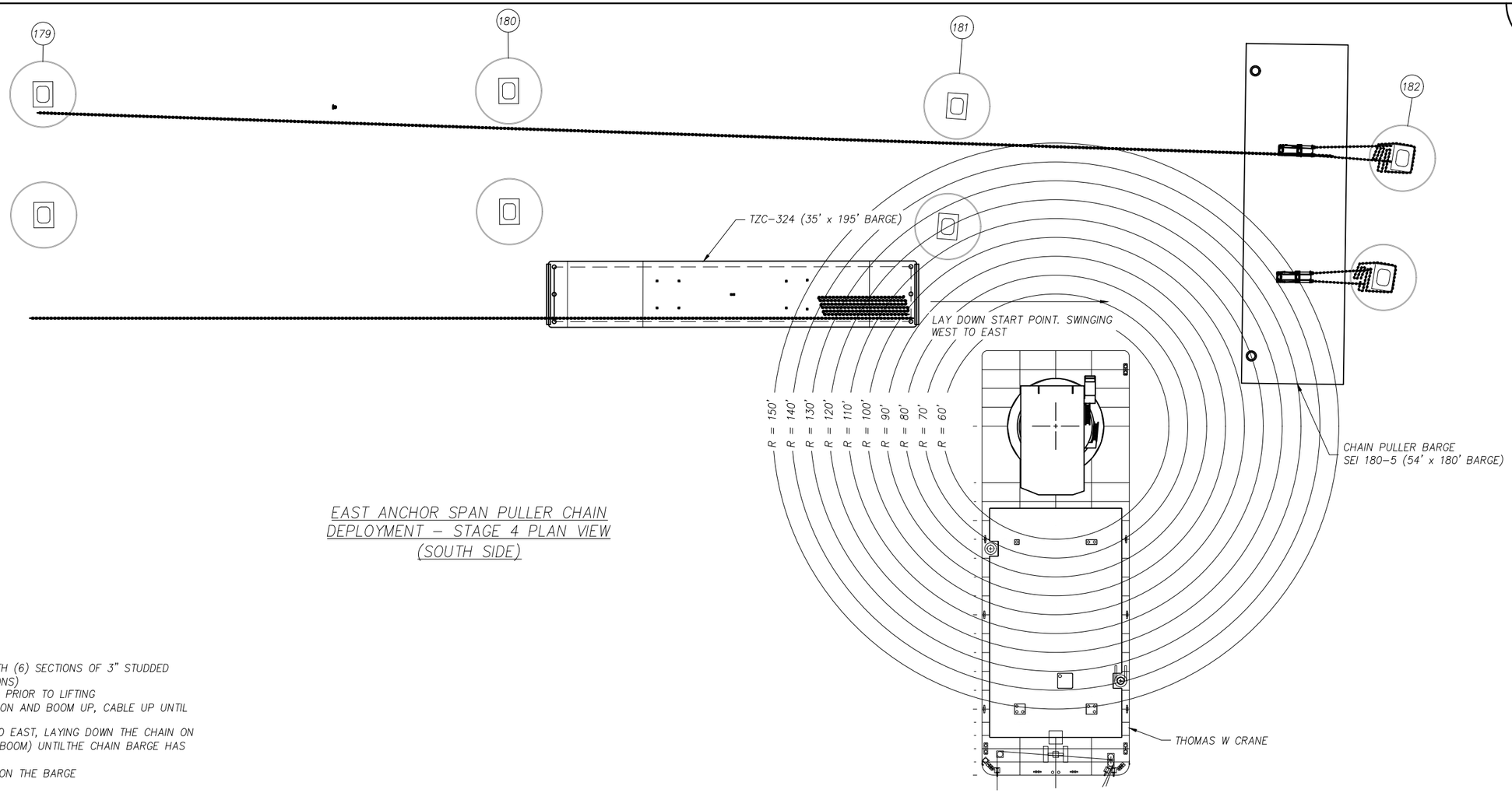

EAST ANCHOR SPAN PULLER CHAIN DEPLOYMENT – STAGE 4 PLAN VIEW (SOUTH SIDE)

GENERAL SEQUENCE:

1. 35' x 195' BARGE ARRIVES TO HUDSON HARBOR WITH (6) SECTIONS OF 3" STUDDED ANCHOR CHAIN (4 – 250' SECTIONS, 2 – 200' SECTIONS)
2. ATTACH NORWEGIAN BUOY AND WIRE ROPE TO CHIN PRIOR TO LIFTING
2. THOMAS W TO PICK THE SOUTHEASTERN 250' SECTION AND BOOM UP, CABLE UP UNTIL IT IS FULLY VERTICAL.
3. START CABLING DOWN AND SWINGING FROM WEST TO EAST, LAYING DOWN THE CHAIN ON THE RIVER BED SLOWLY (TO AVOID SIDE LOADING THE BOOM) UNTILTHE CHAIN BARGE HAS BEEN REACHED (SEE FINAL ELEVATION BELOW)
4. CONNECT THE 250' SECTION TO THE 200' SECTION ON THE BARGE
5. UNHOOK THE CHAIN FROM THE HOOK.
6. ANCHOR LUGS TO BE WELDED TO EACH END OF THE BARGE EVERY 20' AND TIED OFF WITH SOFT LINE. ONCE ALL THE CHAIN IS DEPLOYED OF THE EAST AND WEST ENDS OFF THE BARGE THE CRANE IS TO LIFT A SECTION INTO THE WATER AND ONE OF THE SOFT LINES SHOULD BE CUT. THIS WILL CAUSE A CHAIN REACTION RESULTING IN THE REST OF THE CHAIN FALLING OFF THE BARGE

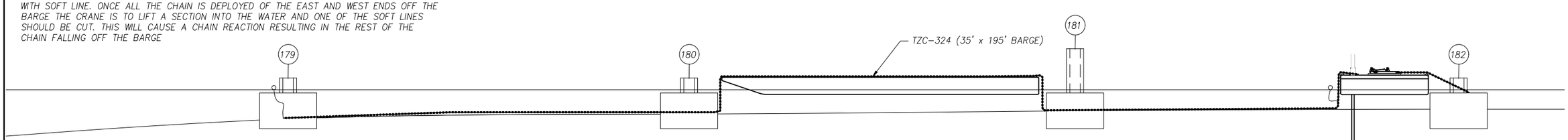

EAST ANCHOR SPAN PULLER CHAIN DEPLOYMENT – ELEVATION VIEW (FINAL)

ALTERED ON:	AFFIXED ON:
SIGNATURE: STAMP:	SIGNATURE: STAMP:

NEW YORK STATE THRUWAY AUTHORITY
DEPARTMENT OF ENGINEERING
200 SOUTHERN BLVD., ALBANY, NY 12209

TITLE OF PROJECT: THE NEW NY BRIDGE
CONTRACT NUMBER: D214134
LOCATION OF PROJECT: PIN 8TZ.100 TANY 12-18B
MILEPOST 14.67 +/- IN
ROCKLAND & WESTCHESTER COUNTIES

TAPPAN ZEE CONSTRUCTORS, LLC

REVISIONS

REV	DATE	BY	CHK BY	DESCRIPTION
6				
5				
4				
3				
2				
1				

DESIGNED BY:	A. REICHARD
DESIGN CH'K BY:	A. REEVE
DRAWN BY:	A. REICHARD
DRAWING CH'K BY:	A. REEVE
SUPERVISOR:	B YAFFEE

TITLE OF DRAWING
TZC DEMOLITION WORKS
AREA 4 MAINSPAN
EAST A/S REMOVAL
CHAIN PULL-DOWN

DATE: 10-16-18
DRAWING NUMBER: TZC-0931-06
REVISION: 00A

DOCUMENT TRACKING CODE:

Attachment M
Demolition Equipment on East Anchor Span

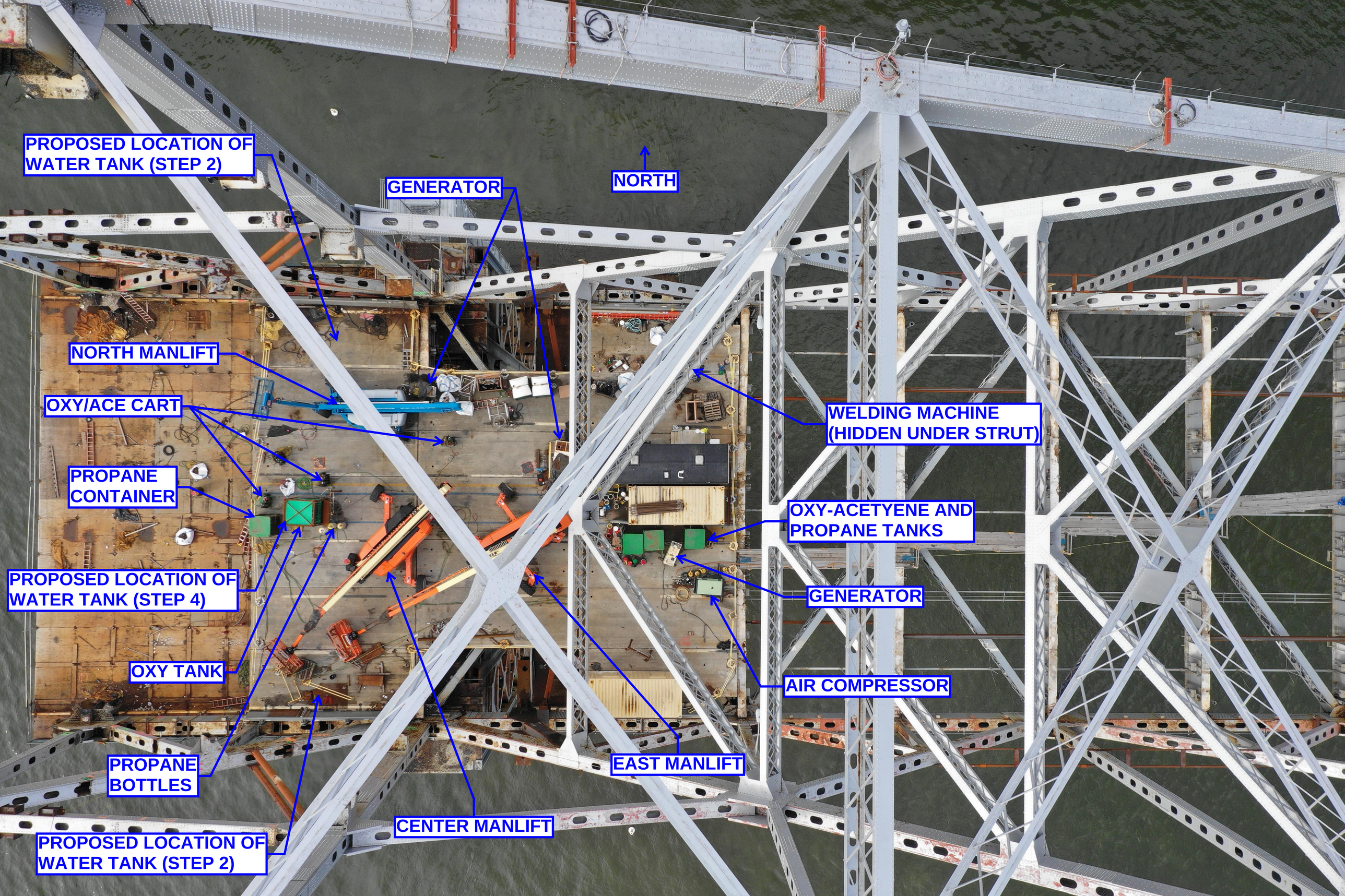
PROPOSED LOCATION OF WATER TANK (STEP 2)
GENERATOR
NORTH
NORTH MANLIFT
OXY/ACE CART
PROPANE CONTAINER
PROPOSED LOCATION OF WATER TANK (STEP 4)
OXY TANK
PROPANE BOTTLES
PROPOSED LOCATION OF WATER TANK (STEP 2)
CENTER MANLIFT
EAST MANLIFT
WELDING MACHINE (HIDDEN UNDER STRUT)
OXY-ACETYENE AND PROPANE TANKS
GENERATOR
AIR COMPRESSOR

EQUIPMENT STAGED NEAR PIER 176						
Item	***Quantity***	***Power Source***	***Fuel Capacity/Volume***	***Hydraulic Tank Capacity***	***Engine Oil Capacity***	***Coolant Fluid Capacity***
JLG 1500 AJP Manlift	1	Diesel	45 gallons	93 gallons		
JLG 1500 AJP Manlift	1	Diesel	45 gallons	93 gallons		
Genie ZX135/70 Manlift	1	Diesel	40 gallons	65 gallons		
Praxair Liquid Oxygen Pod	1		44,200 ft^3			
Gas Oxygen Cylinders	60		300 ft^3/EA = 18,000 ft^3			
Propane Gas Cylinders	6		23.6 gal/EA = 141.6 gal			
300 kW Generator	1	Diesel	206 gallons		7 gallons	3.96 gallons
135 CFM Air Compressor	1		27 gallons		7.3 quarts	2.75 gallons
400 Amp Welding Machine	1	Diesel				

EQUIPMENT STAGED ON PIER 178						
Item	***Quantity***	***Power Source***	***Fuel Capacity/Volume***	***Hydraulic Tank Capacity***	***Engine Oil Capacity***	***Coolant Fluid Capacity***
Gas Oxygen Cylinders	40		300 ft^3/EA = 12,000 ft^3			
150 kW Generator	2	Diesel	254 gallons		5 gallons	9.5 gallons
135 CFM Air Compressor	1		27 gallons		7.3 quarts	2.75 gallons
Fuel Cell	1		250 gallons			

Attachment N
Pollution Abatement & Containment Removal Plan

TAPPAN ZEE BRIDGE SPAN

POLLUTION ABATEMENT & CONTAINMENT REMOVAL PLAN

Prepared by:

Miller Environmental Group.
169 Stone Castle Road
Rock Tavern, New York 12575

For:

Blake Yaffee
Demolition Area Manager Tappan Zee Constructors
555 White Plains Road, Suite 400, Tarrytown NY 10591

November 8, 2018

1.0 INTRODUCTION

The United States Department of Transportation approved the replacement of the original Tappan Zee Bridge in 2012 to be built by Tappan Zee Constructors (TZC). In 2013, construction of the replacement bridge was started. In 2018, the replacement bridge, named Governor Mario M. Cuomo Bridge was opened for traffic. The original Tappan Zee Bridge was officially closed on Oct. 6, 2017, and demolition of the original bridge began.

On September 8, 2018, a remaining section of the original Tappan Zee bridge span unexpectedly shifted. This shift has brought up concerns about the structural integrity of the remaining bridge spans and safety concerns for the nearby new Governor Mario M. Cuomo Bridge, located less than 160 ft. from the original bridge spans.

During a date to be determined the Tappan Zee Constructors, LLC. (TZC) in conjunction with Resolve Marine Services plans to remove the East Anchor Span of the Tappan Zee Bridge. During these operations Miller Environmental Group, Inc. (MEG), would stage and then deploy containment boom, absorbent materials, and both marine / land spill response and recovery equipment.

CORPORATE PROFILE

Miller Environmental Group, Inc. (MEG) is a leading environmental response, remediation and Restoration services company, providing industry, government, commercial and residential customers with outstanding service. From its beginnings in 1971, MEG has continuously strived to enhance its standards of quality through innovation, professionalism, and integrity. The consistent growth of MEG has been possible only through exceeding customers' expectations. MEG offers a national reach with personal service through understanding the needs of the communities we serve. MEG dedicates itself to providing customers with the resources necessary for the successful conclusion to any project. MEG is dedicated to being the premier provider of Environmental Services in each geography where service is provided.

MEG's workforce consisting of environmental managers, remediation specialists, compliance experts and emergency responders is complimented by its technical division consisting of environmental engineers, geologists, hydro-geologists, and environmental scientists. We at MEG feel that our personnel coupled with our long-term company vision will continue to support our goal of being the premier Environmental Services provider in each of our operating areas. MEG has the knowledge, experience, personnel and equipment to get the job done. We are proud to say we live up to our commitment of exceptional service to our clients.

There are a number of questions that we ask our clients to ask our competition when evaluating a prospective company to provide an Environmental Service and these are just a few that tend to set MEG apart from our competition.

- What is their track record for providing Emergency Response within a time frame?
- Do they provide a Medical Surveillance Program to their employees?
- What are their limits of liability and who is their insurance carrier?
- Do they have a Company Health and Safety program?
- Site Specific Health and Safety Plan?
- Do they have a Drug and Alcohol Testing Program?
- Are they a fully compliant member of ISNETWORLD?
- What level of HAZWOPER and HAZMAT training do their employees receive?
- What is their creditworthiness and history of paying vendors?
- What are a few examples of their ability to solve challenging problems?
- What projects have gone well and not so well?

MARINE SERVICES

Miller Environmental Group's Marine capability includes the provision of services for national and international shipping lines, tug and barge operators, and various geophysical and hydrographic survey companies. They also include locally based businesses both large and small, inclusive of underwater diving contractors and construction companies.

Our marine equipment and trained personnel are available twenty-four hours a day, seven days a week. Our captains are all USCG licensed masters and/or mates. Our vessels are USCG inspected and certified. All deckhands are trained and versed in the different types of operation we perform throughout the year. Personnel are 40 hour HAZWOPER trained and certified in oil spill response operations, including boom deployment and skimming operations.

At Miller Environmental Group, we provide a versatile, quality service with experienced, trained personnel. We have a well-maintained workboat fleet with resources ranging from a 21' center console outboard up to a 220' anchor-handling vessel.

- AMPD Standby Booming Services
- Research and Survey Support Vessels
- Underwater Cable and Pipe Support Vessels
- Construction Support Vessels
- Dive Support Vessels
- Potable Water Transport and Discharge Capabilities
- Line handling
- Dredge Tenders
- Salvage and Towing Services
- Launch Services
- Ships Spares and Stores Delivery
- Certified NAUI Divers

2.0 POLLUTION ABATEMENT & CONTAMINANT REMOVAL PLAN

Salvage Site Work Area:

Prior to the East Anchor Span's removal MEG would pre stage and configure enough containment boom in the Hudson River to deploy around the potential release source locations of pollution for equipment located on the East Anchor Span once it is brought down and in the Hudson River. Because the trajectory of the pollution generated is unknown MEG will utilize the US Coast Guard Area Contingency Plan, NOAA, and NYS DEC sensitive area mapping to determine shore line areas and habitats that will require protection.

MEG vessels and marine personnel will evaluate any release source locations and deploy 18" spill containment boom with anchor points around the East Anchor Span once an "All Clear" is given to proceed after the span is in the Hudson River. Dependent upon the tide cycle during operations secondary 18" spill containment boom will be deployed at the direction the tide is traveling to provide additional containment.

Sorbent booms and oil absorbing sweep will be placed inside the primary 18" containment boom and also inside the secondary 18" containment boom. These absorbents will be monitored by MEG Vessels and marine personnel and changed out with new absorbents accordingly.

During the equipment and pollution release recovery process, MEG marine vessels will be deployed around the operation 24 hours and personnel will maintain containment boom around the recovery area and recovery barges. Skimming equipment will be present and utilized as necessary; absorbents will be placed in the interior portion of the containment boom. The operational period will be divided into two (2) twelve 12 hour work periods.

MEG will provide workboats, skimmers, and absorbents downstream of the work area in order to recovery any recoverable product released. Shoreline personnel will be available for observing shoreline areas and outfalls in the Hudson River for pollution and will deploy as required.

3.0 PREPARATION ACTIVITIES

1. Site meetings & logistical coordination with all stakeholders involved.
2. Determine day / date salvage activities will begin. Tidal influences/ potential weather
3. Organize Vessel launch points & recovery points along Hudson River.
4. Stage and make ready for deployment MEG spill response & recovery assets.
5. Generate Site Health & Safety Plan & Identify and mitigate hazards.

4.0 PERSONNEL SAFETY & ACCOUNTABILTY

Working Over / Near Water (OSHA - 29 CFR 1926.106)

Employees working over / near water or where the danger of drowning exists shall be provided with an U.S. Coast Guard approved life jacket or buoyant work vest

Life jackets or Marine Exposure Suits shall be worn correctly according to the manufacturer's directions

Prior to and after use, life jackets shall be inspected thoroughly for defects which would alter their strength and/or buoyancy.

MEG will utilize a photo ionization detector (PID) and a 4 gas meter for monitoring of atmosphere during salvage and environmental standby operations. Any adverse conditions will be noted and a work stoppage will be called if conditions warrant.

All MEG personnel will have respiratory protection in the event that the conditions of the atmosphere warrant such protection. A site specific health and safety plan will be furnished before work commences. Site fluids will be available for personnel for hydration.

If inclement weather is a factor, personnel will shelter into cabin boats and if needed will be rotated back to shore to come out of the weather. A dedicated transport safe boat will be on standby for the duration of the project to transport personnel if needed.

5.0 STORAGE & DISPOSAL OF WASTES

MEG will pre stage lined 20 yard roll off containers to collect bagged soiled absorbents for future disposal. Liquids recovered from on water skimming / collection operations would be placed into a storage tank either staged at shoreline or on a barge waterside. Accounting of liquid waste recovered will done and then transferred to vacuum truck / trailers for transport and disposal.

6.0 US COAST GUARD OIL SPILL REMOVAL ORGANIZATION (OSRO) CLASSIFICATION

U.S. Department of Homeland Security
United States Coast Guard

Commanding Officer
United States Coast Guard
National Strike Force Coordination Center

1461 North Road Street
Elizabeth City, NC 27909
Phone: 252-331-6000
FAX: 252-331-6012

16465

JUN 11 2017

Miller Environmental Group
Attn: George Wallace
538 Edwards Ave.
Calverton, NY 11933

Dear Mr. Wallace,

Your application for your Nonfloating Oil (NFO) classification letter has been reviewed and approved as outlined in the Coast Guard Oil Spill Removal Organization (OSRO) Classification Guidelines dated March 2016. Your OSRO classification number is 20; please use this number in all future correspondence to this office. If there are changes in the core equipment described in your application that would diminish NFO response capability in any port for which Miller Environmental Group (MEG) holds this classification, you shall report it to the NSFCC. Your company maintains several classifications which are listed in enclosure (1).

You are responsible for informing both this office and your clients of any changes to your status. Technical limitations currently prevent the additional resources listed in your application from being entered into the Response Resource Inventory (RRI) database. However, when queried, MEG will be listed as NFO capable in the COTP zones and Alternative Classification Cities approved. In the near future, the RRI database will be amended to accept the new NFO core response equipment. At that time, my staff will contact you to ensure your NFO resources are recorded. The database can be accessed at https://cgrri.uscg.mil. Your classifications will be listed and maintained in the OSRO Classification Matrix, which is available for review at https://cgrri.uscg.mil/rriadmin/reports/webclassificationreport.aspx.

If you have any questions or would like more information regarding your classifications, please contact the NSFCC using the contact information found in enclosure (2).

Thank you for your participation in the OSRO Classification program.

Sincerely,

K.A. Thorkilson
Commander, US Coast Guard

Enclosures: (1) MEG RRI classification totals
(2) NSFCC Contact List

Copy: COMDT (CG-MER)
CGD One (dr)
CGD Five (dr)
CGD Eight (dr)
CGD Nine (dr)
EPA Region 1
EPA Region 2
EPA Region 3
PHMSA (HQ)

United States Coast Guard Response Resource Inventory Owner Report

*****FOR OFFICIAL USE ONLY*****

Owner Name and Address:
Miller Environmental Group - Classified OSRO Number: 20
538 Edwards Ave.,
Calverton, NY - NEW YORK 11933
USA

Point of Contact:
Mark Miller, George Wallace

Contact Email:
mmiller@millerenv.com

Official Phone:
(631)369-4900

Business Phone:

FAX:
(631)369-4909

Organization Type:
Mechanical Classified OSRO
Non-Floating Oil Classified OSRO

Mechanical Classifications

COTP Zone	Operating Environment	Facility MMPD	Facility WCD1	Facility WCD2	Facility WCD3	Vessel MMPD	Vessel WCD1	Vessel WCD2	Vessel WCD3
Baltimore - DISTRICT 5	River or Canal	✓	✓	✓	✓	✓	✓	✓	✓
Baltimore - DISTRICT 5	Inland	✓	✓	✓	✓	✓	✓	✓	✓
Boston - DISTRICT 1	River or Canal	✓	✓	✓	✓	✓	✓	✓	✓
Boston - DISTRICT 1	Inland	✓		✓	✓	✓	✓	✓	✓
Buffalo - DISTRICT 9	River or Canal	✓	✓	✓	✓	✓	✓	✓	✓
Buffalo - DISTRICT 9	Inland	✓	✓	✓	✓	✓	✓	✓	✓
Buffalo - DISTRICT 9	Great Lakes		✓	✓	✓	✓	✓	✓	✓
Buffalo (Oswego, NY) - DISTRICT 9	River or Canal	✓	✓	✓	✓	✓	✓	✓	✓
Buffalo (Oswego, NY) - DISTRICT 9	Inland	✓	✓	✓	✓	✓	✓	✓	✓
Buffalo (Oswego, NY) - DISTRICT 9	Great Lakes		✓	✓	✓	✓	✓	✓	✓

ENCLOSURE (1)

Delaware Bay - DISTRICT 5	River or Canal	✓	✓	✓	✓	✓	✓	✓	✓
Delaware Bay - DISTRICT 5	Inland	✓	✓	✓	✓	✓	✓	✓	✓
Delaware Bay (Lewes, Lower Del. Bay) - DISTRICT 5	River or Canal	✓	✓	✓	✓	✓	✓	✓	✓
Delaware Bay (Lewes, Lower Del. Bay) - DISTRICT 5	Inland	✓	✓	✓	✓	✓	✓	✓	✓
Hampton Roads - DISTRICT 5	River or Canal	✓	✓	✓	✓	✓	✓	✓	✓
Hampton Roads - DISTRICT 5	Inland	✓	✓	✓	✓	✓	✓	✓	✓
Long Island Sound - DISTRICT 1	River or Canal	✓	✓	✓	✓	✓	✓	✓	✓
Long Island Sound - DISTRICT 1	Inland	✓	✓	✓	✓	✓	✓	✓	✓
New York - DISTRICT 1	River or Canal	✓	✓	✓	✓	✓	✓	✓	✓
New York - DISTRICT 1	Inland	✓	✓	✓	✓	✓	✓	✓	✓
New York (Albany) - DISTRICT 1	River or Canal	✓	✓	✓	✓	✓	✓	✓	✓
New York (Albany) - DISTRICT 1	Inland	✓	✓	✓	✓	✓	✓	✓	✓
North Carolina - DISTRICT 5	River or Canal	✓	✓	✓	✓	✓	✓	✓	✓
North Carolina - DISTRICT 5	Inland	✓		✓	✓	✓	✓	✓	✓
North Carolina (Cape Fear River) - DISTRICT 5	River or Canal	✓	✓	✓	✓	✓	✓	✓	✓
North Carolina (Cape Fear River) - DISTRICT 5	Inland	✓		✓	✓	✓	✓	✓	✓
Northern New England - DISTRICT 1	River or Canal	✓	✓	✓	✓	✓	✓	✓	✓
Northern New England - DISTRICT 1	Inland	✓	✓	✓	✓	✓	✓	✓	✓
Ohio Valley - DISTRICT 8	River or Canal			✓	✓	✓	✓	✓	✓
Ohio Valley -									

DISTRICT 8	Inland			✓	✓	✓	✓	✓	✓
Pittsburg - DISTRICT 8	River or Canal	✓	✓	✓	✓	✓	✓	✓	✓
Pittsburg - DISTRICT 8	Inland	✓	✓	✓	✓	✓	✓	✓	✓
Southern New England - DISTRICT 1	River or Canal	✓	✓	✓	✓	✓	✓	✓	✓
Southern New England - DISTRICT 1	Inland	✓	✓	✓	✓	✓	✓	✓	✓

Dispersant Classifications

No Dispersant Classifications

Non-Floating Oil Classifications

Classified COTP Zone(s)

Baltimore - DISTRICT 5
Boston - DISTRICT 1
Buffalo(Oswego, NY) - DISTRICT 9
Delaware Bay - DISTRICT 5
Delaware Bay(Lewes, Lower Del. Bay) - DISTRICT 5
Hampton Roads - DISTRICT 5
Long Island Sound - DISTRICT 1
New York - DISTRICT 1
New York(Albany) - DISTRICT 1
North Carolina - DISTRICT 5
North Carolina(Cape Fear River) - DISTRICT 5
Northern New England - DISTRICT 1
Pittsburg - DISTRICT 8
Southern New England - DISTRICT 1

Marine Salvage and Firefighting COTP Operational Zones

No Marine Salvage and Firefighting COTP Operational Zones

Sites Registered With This Owner:

Miller Environmental Group (Paulsboro, NJ)
Miller Environmental Group (Lorton)
Miller Environmental Group (Harrisburg, PA)
Miller Environmental Group (Dover, DE)
Miller Environmental Group (Baltimore, MD)

Baker Tanks
Baker Tanks
Baker Tanks
United Industrial Services (Meriden, CT)
Rain for Rent
Mystic Transportation, Inc
Miller Marine Services (Newark, NJ)
Miller Marine Services (New Haven)
Miller Environmental Group, Inc. (Nustar)
Miller Environmental Group, Inc. (BP)
Miller Environmental Group, Inc (Towboat)
Miller Environmental Group Inc. (Bayway)
Miller Environmental Group (Westbury, NY)
Miller Environmental Group (Staten Island, NY)
Miller Environmental Group (Port Jefferson, NY
Miller Environmental Group (Linden, NJ)
Miller Environmental Group (Hudson Valley, NY)
Miller Environmental Group (Global/Citgo)
Miller Environmental Group (Calverton, NY)
Miller Environmental Group (Albany, NY)
Island Transportation Corporation
Clean Water of NY
Clean Water of New York, Inc.
Baker Tanks

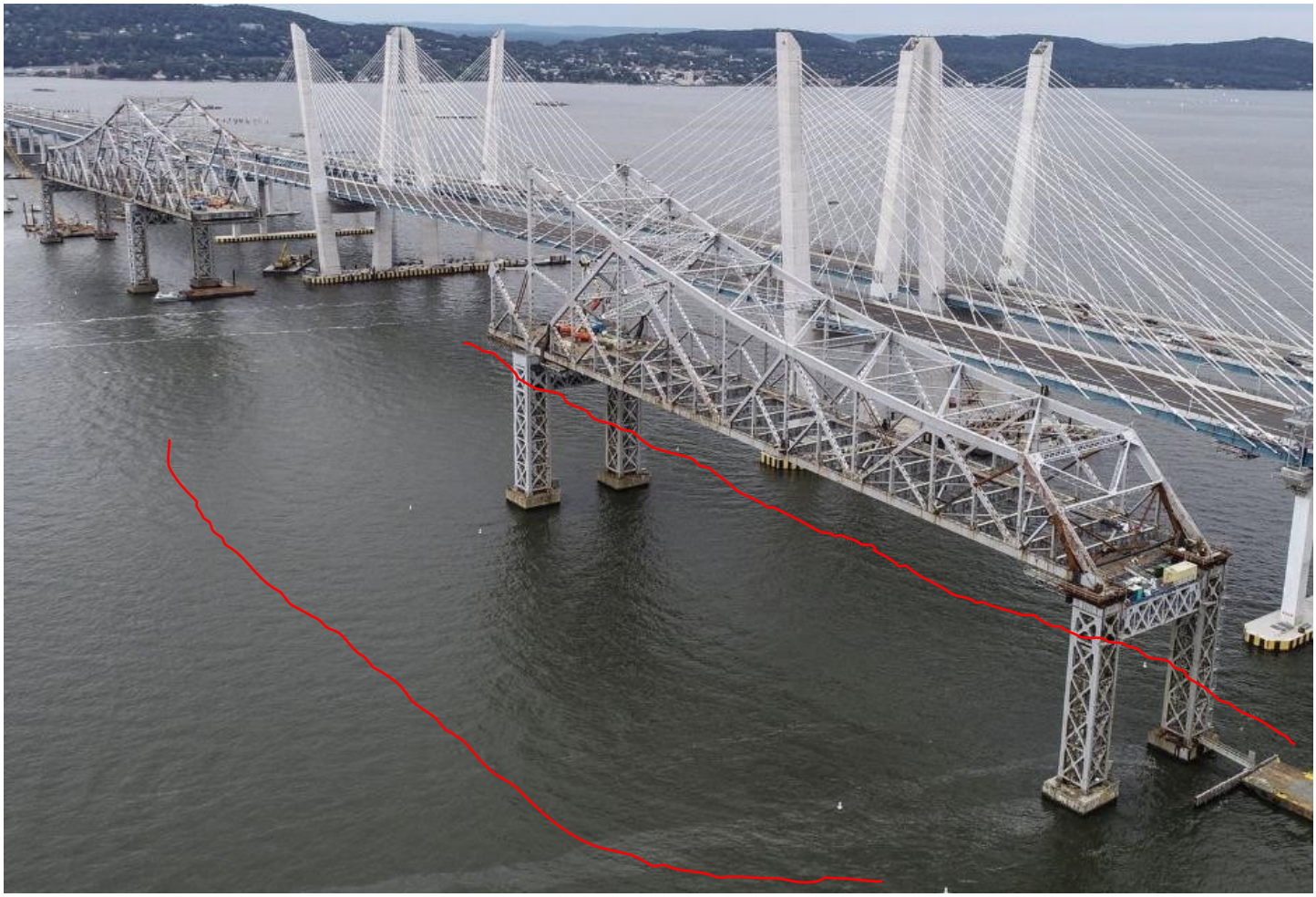

Primary containtment boom would be placed around any pollution release source locations from the East Anchor Span and its contents once it is down and in the river. Secondary Containment Boom would be placed at both North and South of the structure to compensate for tidal cycle.

--------- 18” Containment Boom – Pre Staged.

_____ 18’ Secondary Boom Sections for Tidal Cycle