[redacted]

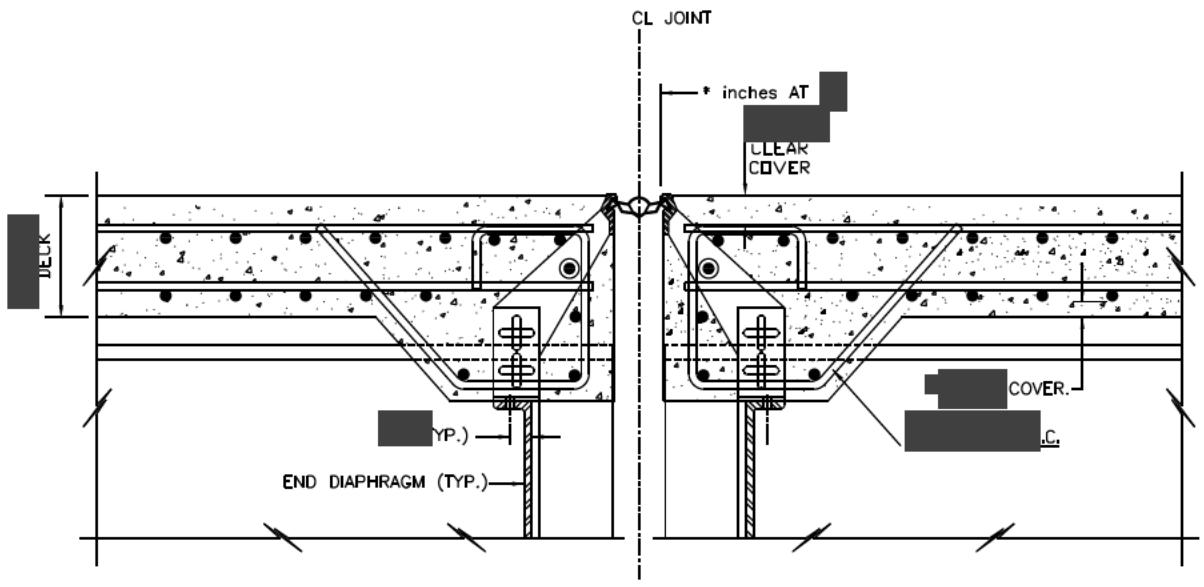

STRIP SEAL JOINT – NEW MONOLITHIC DECK

DETAIL 9.2.5(a)

[redacted]

NOTE:
ALL REINFORCING BARS
SHALL BE GALVANIZED.

* - DIMENSION VARIES WITH JOINT SIZE.

J:\ORANGEBK\ENGLISH\925a&925b&925c

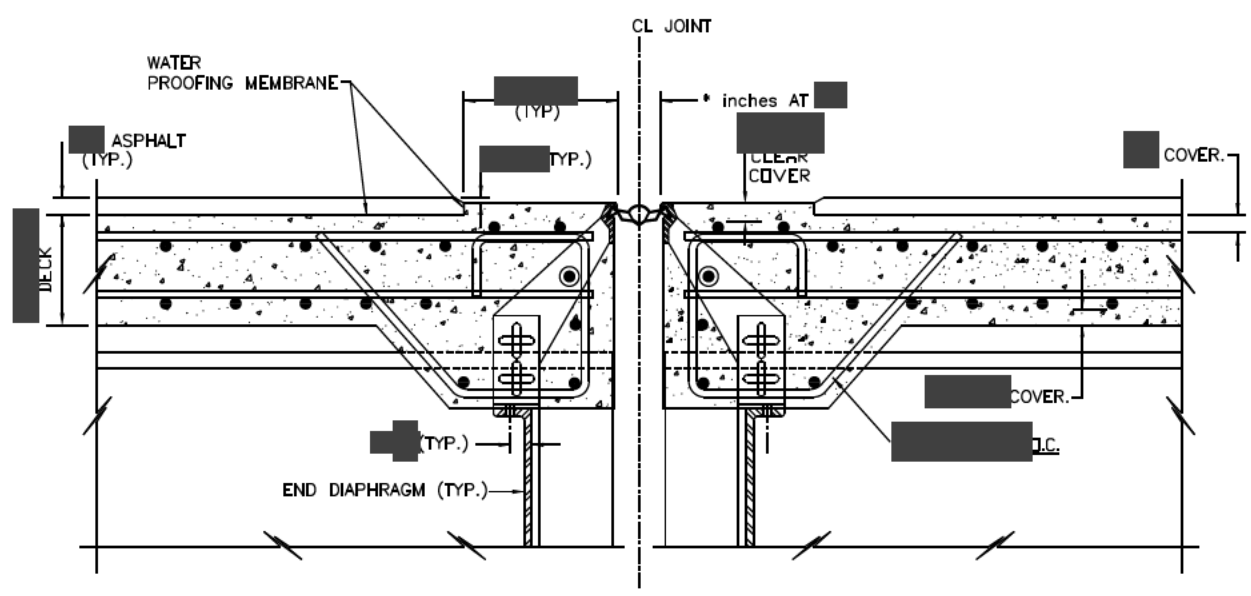

STRIP SEAL JOINT – NEW 2-COURSE DECK

DETAIL 9.2.5(b)

[redacted]

NOTE:
ALL REINFORCING BARS
SHALL BE GALVANIZED.

* - DIMENSION VARIES WITH JOINT SIZE.

J:\ORANGEBK\ENGLISH\925a&925b&925c

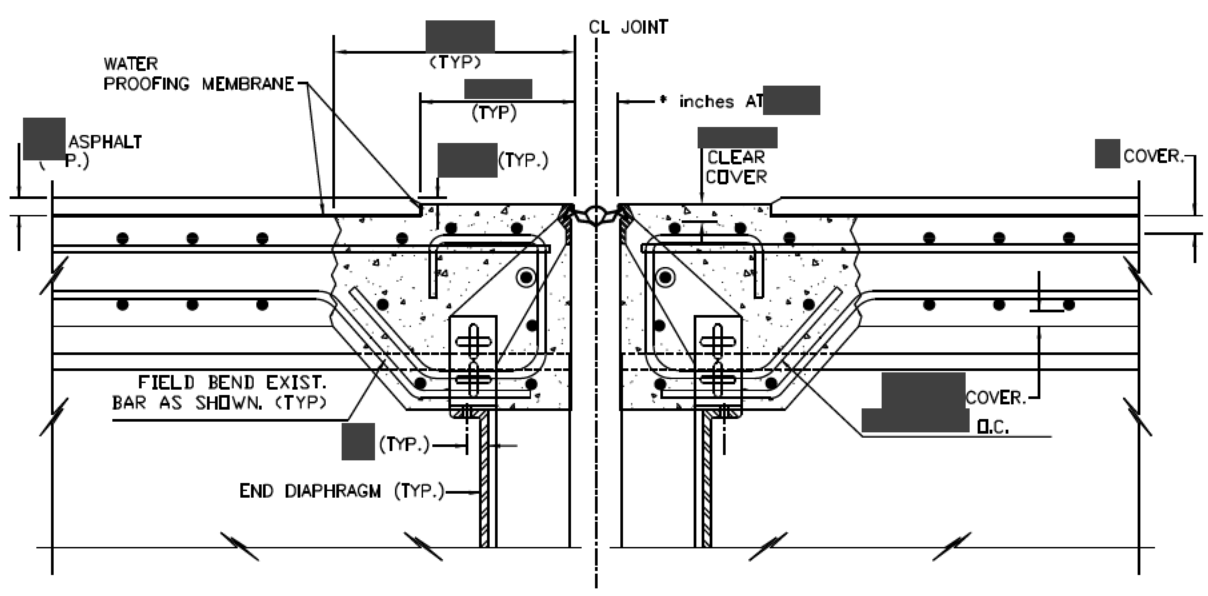

STRIP SEAL JOINT – EXISTING DECK

DETAIL 9.2.5(c)

[redacted]

NOTE:
ALL NEW REINFORCING BARS
SHALL BE GALVANIZED.

* - DIMENSION VARIES WITH JOINT SIZE.